Stage Blinder IP

RGBW

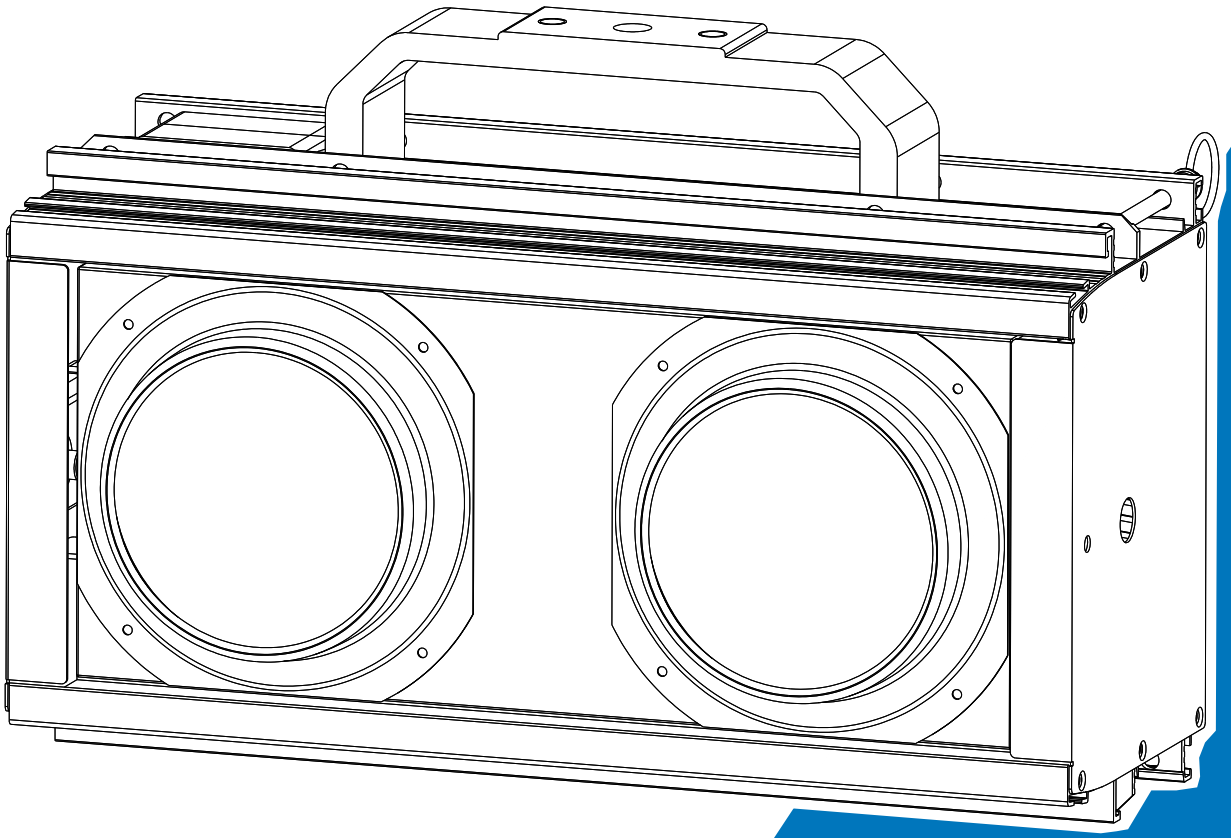

User Manual

Please read the instruction carefully before use

CONTENTS

01/ Safety Instructions 2
02/ Technical Specifications 4
03/ Control Panel 5
04/ Fixture Installation 6
05/ How To Set The Unit 9
5.1 Main Functions 9
06/ Control By Universal DMX Controller 14
6.1 DMX512 Connection 14
6.2 Address Setting 15
6.3 DMX512 Configuration 15
07/ Error Information 20
08/ Troubleshooting 20
09/ Fixture Cleaning 21

01/ Safety Instructions

Please read the instruction carefully which includes important information about the installation, usage and maintenance.

WARNING

Please keep this User Guide for future consultation. If you sell the unit to another user, be sure that they also receive this instruction manual.

Important:

Damages caused by the disregard of this user manual are not subject to warranty. The dealer will not accept liability for any resulting defects or problems.

- Unpack and check carefully to ensure that there is no transportation damage before using the unit.
- This product is suitable for wet locations. Do not immerse in water.
- DO install and operate by qualified operator.
- DO NOT allow children to operate the fixture.
- Use safety chain when fixing the unit. Handle the unit by carrying its base instead of head only.
- The unit must be installed in a location with adequate ventilation, at least 50cm from adjacent surfaces.
- Be sure that no ventilation slots is blocked, otherwise the unit will be overheated.
- Before operation, ensure that you are connecting this product to the proper voltage in accordance with the specifications in this manual or on the product's specification label.
- It's important to ground the yellow/green conductor to earth in order to avoid electric shock.
- Minimum ambient temperature TA: 0˚C. Maximum ambient temperature TA: 40˚C. Do not operate this product at a lower or higher temperature.
- DO NOT connect the device to any dimmer pack.
- Keep flammable materials away from the fixture while operating to avoid fire hazard.
- Make sure the power cord is not crimped or damaged; replace it immediately if damaged.
- Avoid any flammable liquids, water or metal from entering the unit. Once it happens, cut off the mains power immediately.
- DO NOT operate in a dirty or dusty environment. DO clean the fixture regularly.

- DO NOT touch any wire during operation as there might be a hazard of electric shock.
- Avoid entanglement of the power cord with other wires.
- In the event of serious operating problem, stop using the unit immediately.
- Never turn on and off the unit time after time.
- The housing, the lenses, or the ultraviolet filter must be replaced if they are visibly damaged.
- DO NOT open the housing as there are no user serviceable parts inside.
- DO NOT attempt to operate this unit if it becomes damaged. DO NOT attempt any repairs yourself. Repairs carried out by unskilled people can lead to damage or malfunction. Please contact the nearest authorized technical assistance center if needed.
- Disconnect this product from its power source before servicing.
- DO use the original packaging if the device is to be transported.
- Avoid direct eye exposure to the light source while the product is on.
- DO NOT operate this product if you see damage on the housing, shields, or cables. Have the damaged parts replaced by an authorized technician at once.

02/ Technical Specifications

Power Voltage	100-240V~ 50/60Hz	
Power Consumption	235W	
Light Source	TX-5260RGBW150C33	
Beam Angle	37°	
Dimmer/Strobe	0-100% smooth dimming; outstanding strobe effect with variable speed	
Control	DMX Channel	6/7/10/HSIC Channels
	Control Mode	DMX512
		RDM
	Firmware Upgrade	Firmware Upgrade via DMX link
Construction	Display	LED display
	Data In/Out	3-pin IP XLR (5-pin IP XLR is optional)
	Power In/Out	Waterproof Power Connector in/out
	Protection Rating	IPX4
Features	Beautiful shape, excellent heat dissipation, easy and convenient installation	
	Ideal for professional stages, concerts, clubs, discotheques, mobile DJs, etc.	
Dimensions	400x207x215mm	15.7"x8.1"x8.5"in
Weight	6.8kgs	15lbs

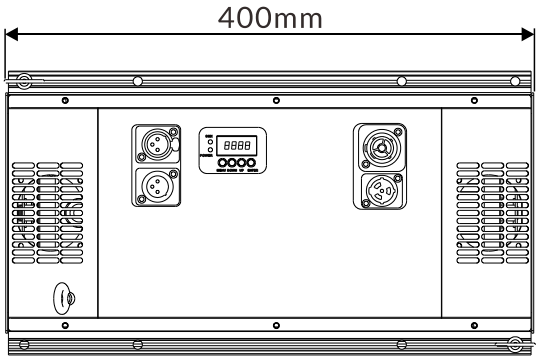

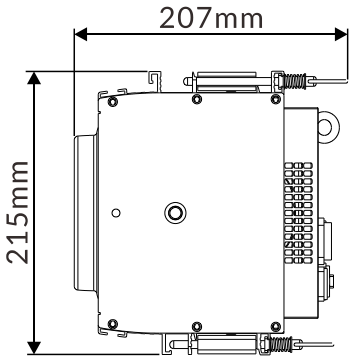

Photometric Diagram:

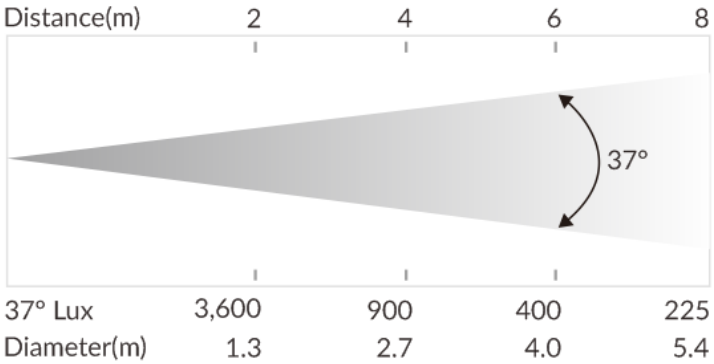

03/ Control Panel

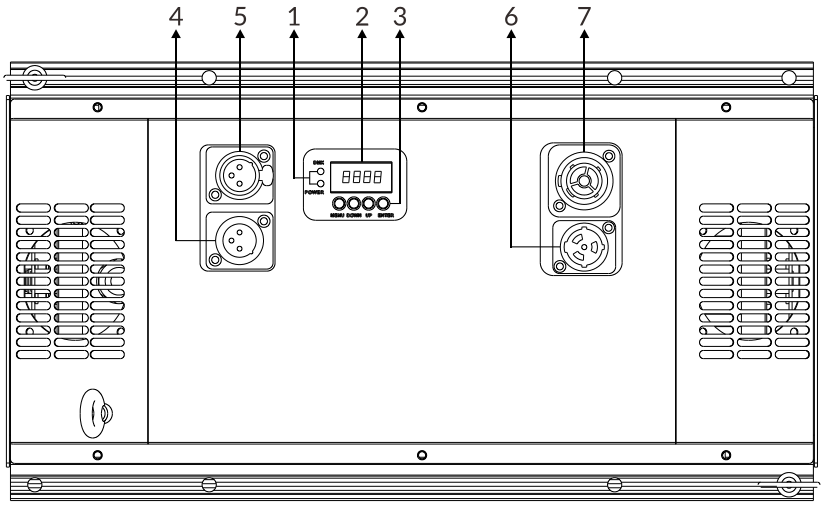

1. LEDs	DMX	On	DMX input present
	POWER	On	Power input present
2. Display	To show the various menus and the selected function		
3. Buttons	MENU	To enter into move backward or leave the menu	
	⮝ UP	To go backward to move up in the menu	
	⮟ DOWN	To go forward to move down in the menu	
	ENTER	To perform the desired functions	
4. DMX IN	For DMX512 link, use 3-pin XLR cable to link the unit and DMX controller to input DMX signal (5-pin XLR cable is optional)		
5. DMX OUT	For DMX512 link, use 3-pin XLR cable to link the next units to output DMX signal (5-pin XLR cable is optional)		
6. POWER IN	To connect to supply power		
7. POWER OUT	To connect to the next fixture		

04/ Fixture Installation

IPX4 RATED

An IP rated lighting fixture is commonly installed in outdoor environments and has been designed with an enclosure that effectively protects the ingress (entry) of external foreign objects such as dust and water. The **International Protection (IP)** rating system is commonly expressed as "IP" (Ingress Protection) followed by two numbers (i.e. IP20) where the numbers define the degree of protection. The first digit (Foreign Bodies Protection) indicates the extent of protection against particles entering the fixture, and the second digit (Water Protection) indicates the extent of protection against water entering the fixture.

An IPX4 rated lighting fixture has been designed for temporary outdoor environments. It has NOT been tested to protect against the ingress of dust (X) but has been tested to protect from splash of water in any direction (4).

PERMANENT OUTDOOR AND/OR MARINE/COSTAL INSTALLATIONS

Please note although this fixture is IP rated, this fixture is **NOT** suitable for permanent outdoor and/or marine environment installations. Installing this fixture in permanent outdoor and/or marine environment installation may cause corrosion and/or excessive wear to the interior and/or exterior components of the fixture. Damages and/or performance issues resulting from installation in a permanent outdoor and/or marine environment installation will void the manufacturer's warranty and will **NOT** be subject to any warranty claims and/or repairs.

- DO install and operate by qualified operator. Fixture(s) should be installed in areas outside walking paths, seating areas, or away from areas were unauthorized personnel might reach the fixture by hand. NEVER stand directly below the fixture(s) when rigging, removing or servicing.
- Always ensure that the unit is firmly fixed to avoid vibration and slipping off during operation. Ensure that the trussing or area of installation must be able to hold 10 times the weight without any deformation. Always attach a safety cable that can hold at least 12 times the weight of the fixture whenever installing this fixture in a suspended environment to ensure that the fixture will not fall if the clamp fails.

Installing the hanging bracket:

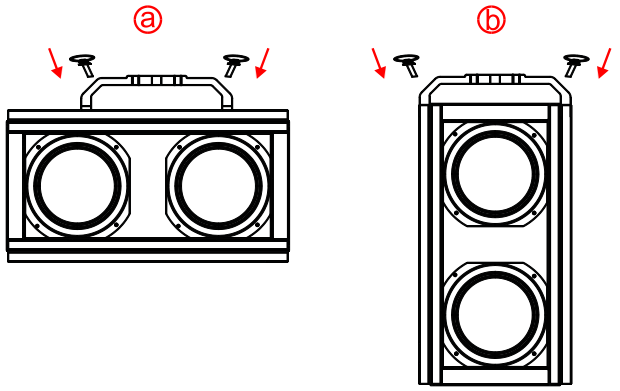

Splicing two fixtures:

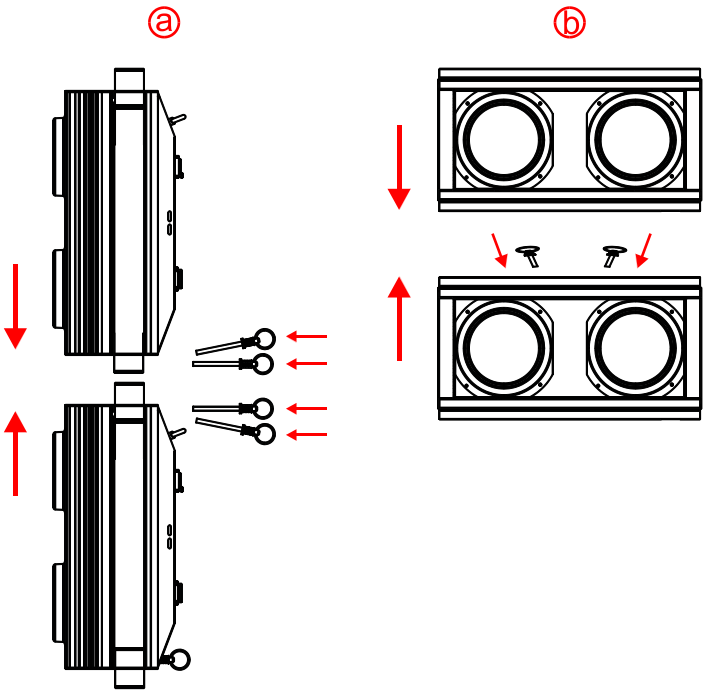

Installing the big hanging bracket (optional):

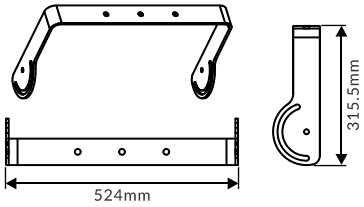

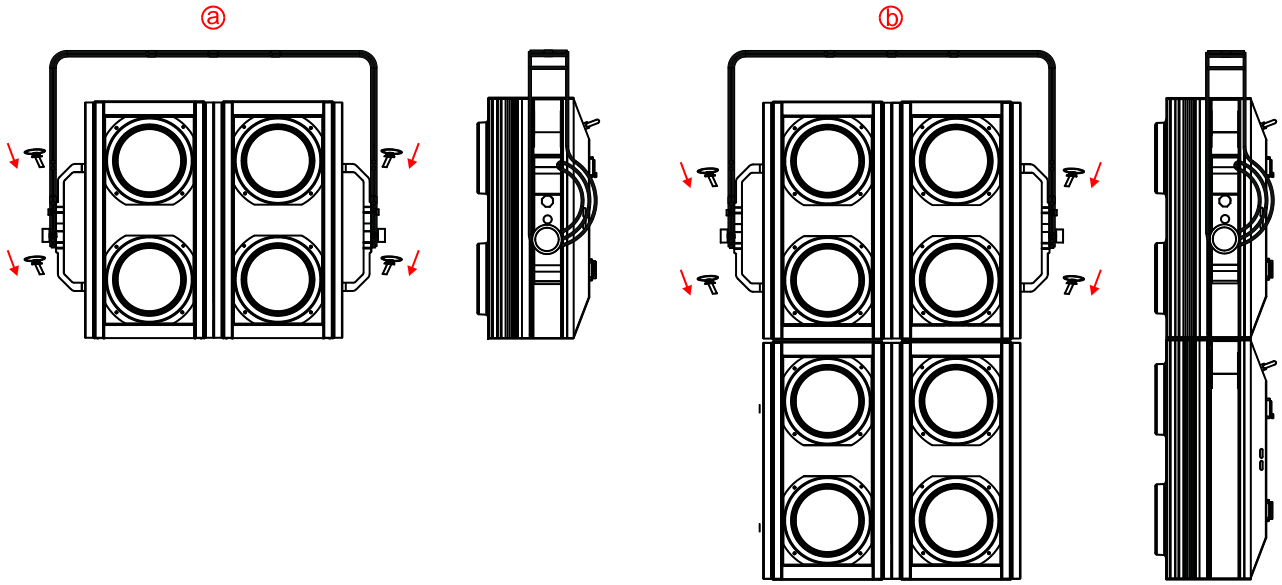

Splicing multiple fixtures:

Warning: Max. load≤10 fixtures vertical.

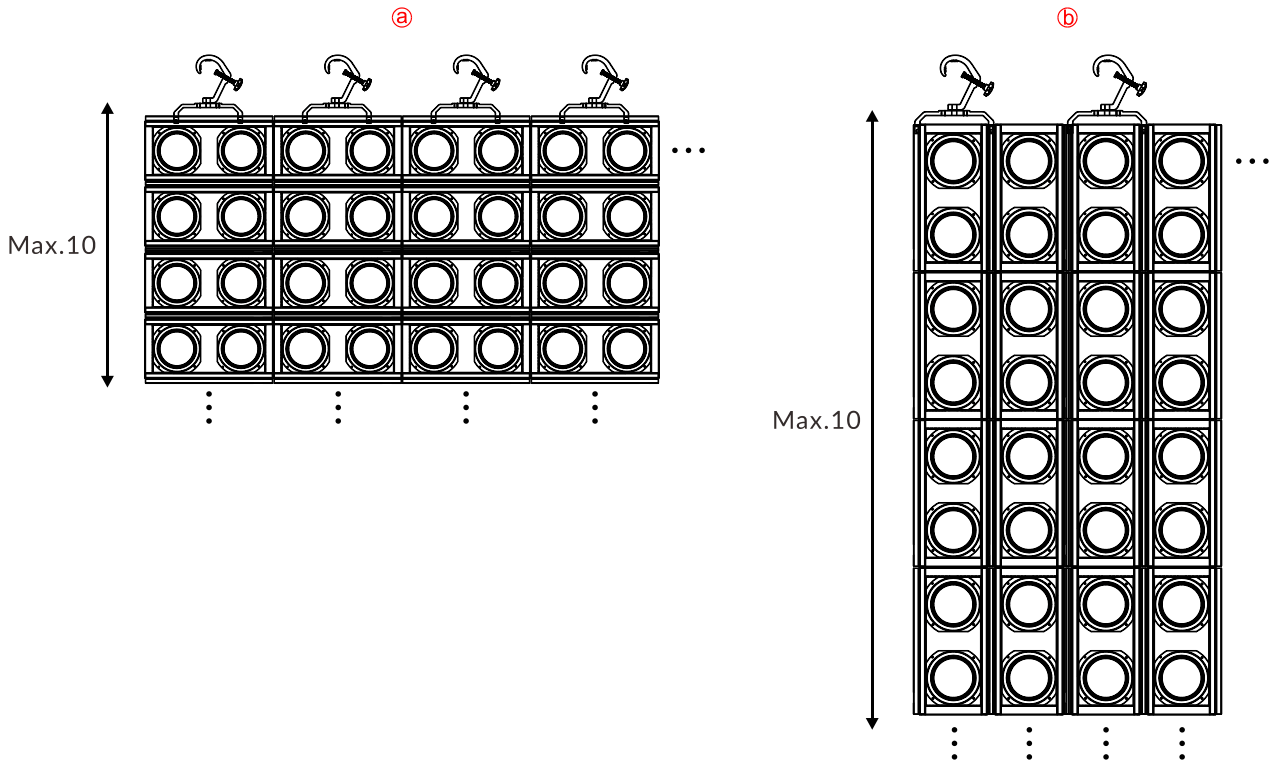

5.1 Main Functions

- To access the control menus, press the [MENU] button.
- Navigate the menu structure, using the [ENTER], [▲ UP] and [▼ DOWN] buttons.
- To select a menu option or to confirm a selection, press the [ENTER] button.
- To return to a higher level in the menu structure without making a change, press the [MENU] button, or wait 30 seconds.

The main functions are shown below:

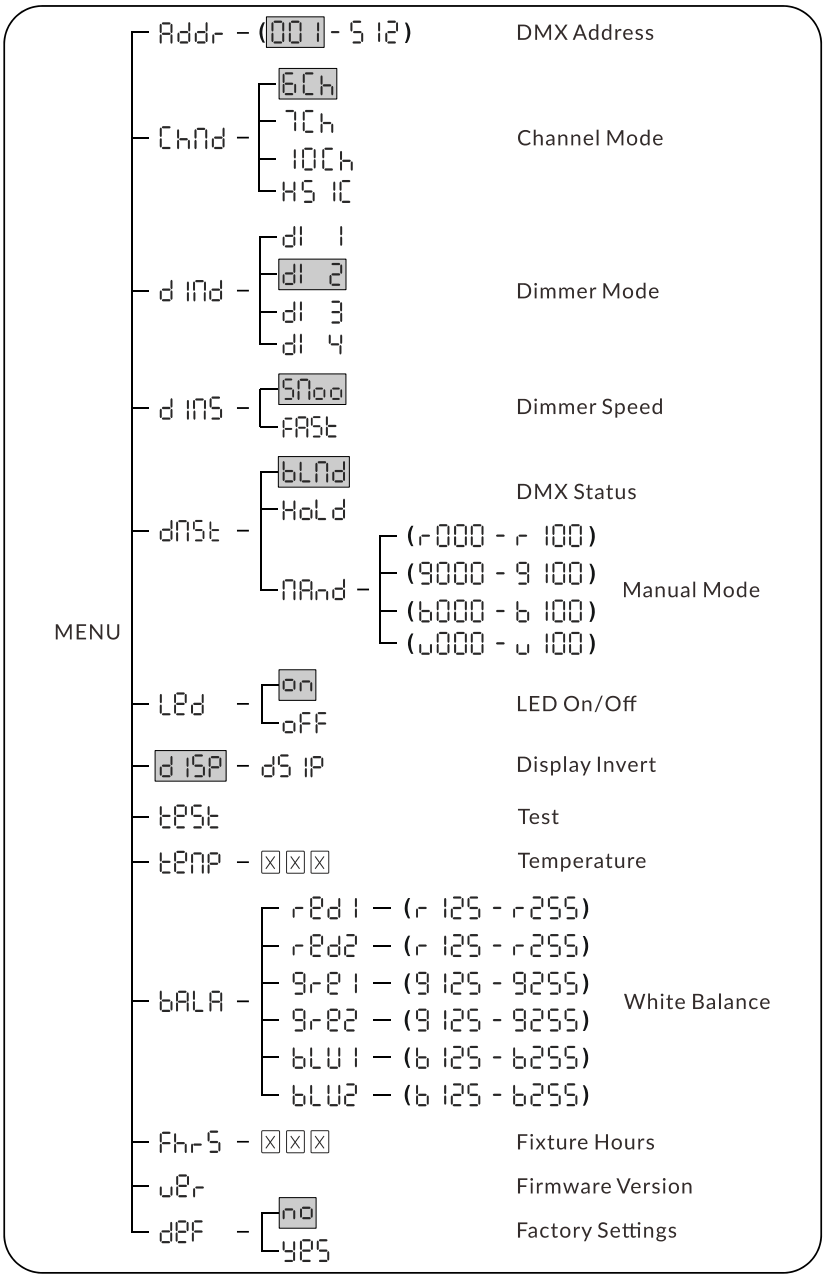

Addr (DMX Address)

Select **Addr,** press ENTER.
Use UP/DOWN button to select an address between 1 and 512, confirm your selection with ENTER.
To exit the menu, press MENU, or wait 30 seconds.

ChMd (Channel Mode)

Select **ChMd,** press ENTER.
Use UP/DOWN button to select between **6 Ch, 7 Ch, 10 Ch** and **HSIC**, confirm your selection with ENTER.
To exit the menu, press MENU, or wait 30 seconds.

DiMd (Dimmer Mode)

Select **DiMd,** press ENTER.
Use UP/DOWN button to select **di 1 (dimmer mode 1), di 2 (dimmer mode 2), di 3 (dimmer mode 3)** or **di 4 (dimmer mode 4)**, confirm your selection with ENTER.
To exit the menu, press MENU, or wait 30 seconds.

DimS (Dimmer Speed)

Select **DimS,** press ENTER.
Use UP/DOWN button to select **Smoo (Smooth)** or **Fast**, confirm your selection with ENTER.
To exit the menu, press MENU, or wait 30 seconds.

DmSt (DMX Status)

Select **DmSt,** press ENTER.

Use UP/DOWN button to select one of the following status:

BlMd (Blackout Mode: Fixture blacks out if DMX signal stops)

Hold (The device continues to operate in the current mode with the last active DMX values until the signal returns)

Mand (Manual Mode)

Confirm your selection with ENTER.

To exit the menu, press MENU, or wait 30 seconds.

Led

Select **Led,** press ENTER.

Use UP/DOWN button to select **On** or **Off**, confirm your selection with ENTER.

To exit the menu, press MENU, or wait 30 seconds.

Disp (Display Invert)

Select **Disp,** press ENTER.

The display rotates by 180°.

To exit the menu, press MENU, or wait 30 seconds.

Test

Select **Test,** press ENTER.

The device immediately performs an automatic self-test.

To end the automatic self-test and exit the menu, press MENU, or wait 30 seconds.

Temp (Temperature)

Select **Temp,** press ENTER.

The device temperature is displayed.

To exit the menu, press MENU, or wait 30 seconds.

bALA (White Balance)

Select **bALA,** press ENTER.

Use UP/DOWN button to select **Red 1, Red 2, Green 1, Green 2, Blue 1** or **Blue 2**, confirm your selection with ENTER.

Use UP/DOWN button to select a value between **125** and **255**, confirm your selection with ENTER.

To exit the menu, press MENU, or wait 30 seconds.

FHrs (Fixture Hours)

Select **FHrs,** press ENTER.

The operating hours is displayed.

To exit the menu, press MENU, or wait 30 seconds.

ver (Firmware Version)

Select **ver,** press ENTER.

The firmware version is displayed.

To exit the menu, press MENU, or wait 30 seconds.

Def (Factory Settings)

Select **Def,** press ENTER.

If you wish to reset the device to the factory settings, select **Yes**. If you do not wish to reset anything, select **No**. Confirm your selection with ENTER.

To exit the menu, press MENU, or wait 30 seconds.

RDM functions: Certain menus of the device and functions can be called up via the RDM protocol.

The parameter IDs are implemented as follows for different commands:

Parameter ID	Command 'Discovery'	Command 'Set'	Command 'Get'
DISC_UNIQUE_BRANCH	√		
DISC_MUTE	√		
DISC_UN_MUTE	√		
DEVICE_INFO			√
SUPPORTED_PARAMETERS			√
SOFTWARE_VERSION_LABEL			√
DMX_START_ADDRESS		√	√
IDENTIFY_DEVICE		√	√
DEVICE_MODEL_DESCRIPTION			√
PARAMETER_DESCRIPTION			√
MANUFACTURER_LABEL			√
DEVICE_LABEL		√	√
BOOT_SOFTWARE_VERSION_ID			√
BOOT_SOFTWARE_VERSION_LABEL			√
DMX_PERSONALITY		√	√
DMX_PERSONALITY_DESCRIPTION			√
SENSOR_DEFINITION			√
SENSOR_VALUE			√
DEVICE_HOURS			√
RESET_DEVICE		√	

√ -Command implemented for the respective parameter ID

06/ Control By Universal DMX Controller

6.1 DMX512 Connection

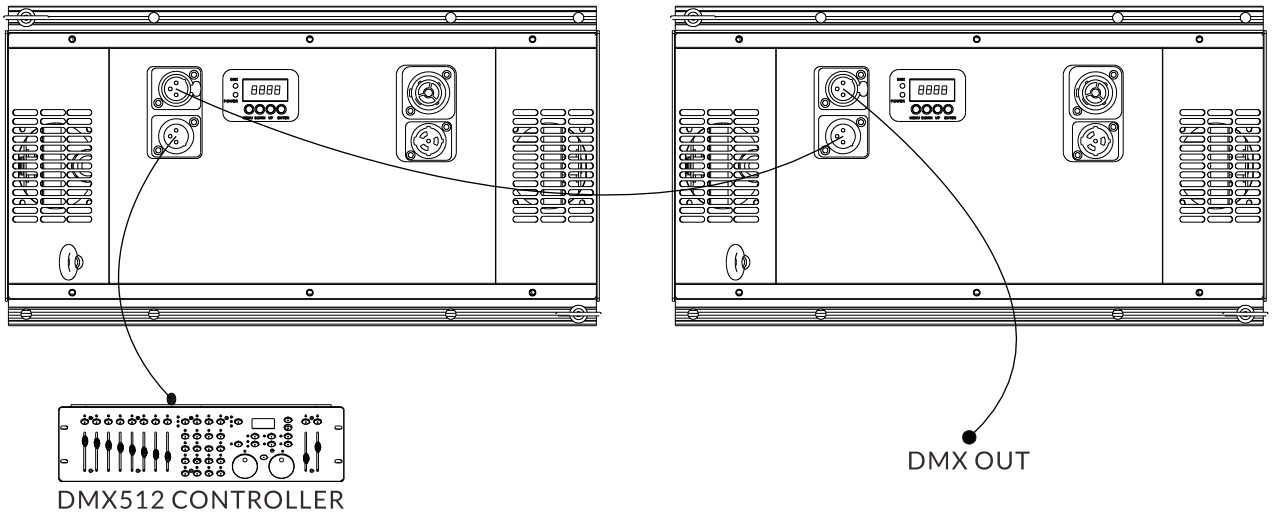

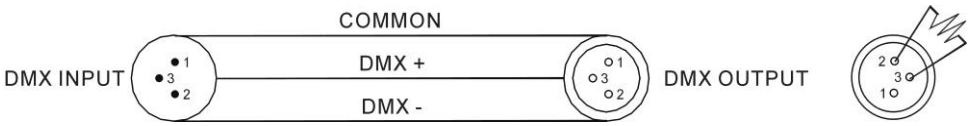

1. At last unit, the DMX cable has to be terminated with a terminator. Solder a 120-ohm 1/4W resistor between pin 2(DMX-) and pin 3(DMX+) into a 3-pin XLR-plug and plug it in the DMX-output of the last unit.
2. Connect the unit together in a “daisy chain” by XLR plug cable from the output of the unit to the input of the next unit. The cable can only be used in series and cannot be connected in parallel. DMX 512 is a very high-speed signal. Inadequate or damaged cables, soldered joints or corroded connectors can easily distort the signal and shut down the system.
3. The DMX output and input connectors are pass-through to maintain the DMX circuit, when one of the units’ power is disconnected.
4. Each lighting unit needs to have a DMX address to receive the data by the controller. The address number is between 1-512.
5. The end of the DMX 512 system should be terminated to reduce signal errors.
6. 3 pin XLR connectors are more popular than 5 pins XLR.

   3 pin XLR: Pin 1: GND, Pin 2: Negative signal (-), Pin 3: Positive signal (+)

   5 pin XLR: Pin 1: GND, Pin 2: Negative signal (-), Pin 3: Positive signal (+), Pin4, Pin5 not used.

6.2 Address Setting

If you use a universal DMX controller to control the units, you have to set DMX address between 1 and 512 so that the units can receive DMX signal.

Press the MENU button to access the control menus, select Addr, press the ENTER button to confirm, the present address will show on the display. Use the UP/DOWN button to adjust the address between 001 and 512, press the ENTER button to store. To exit the menu, press MENU, or wait 30 seconds.

Please refer to the following diagram to address your DMX512 channel for the first 4 units.

Channel Mode	Unit 1 Address	Unit 2 Address	Unit 3 Address	Unit 4 Address
6 channels	1	7	13	19
7 channels	1	8	15	22
10 channels	1	11	21	31
HSIC channels	1	5	9	13

6.3 DMX512 Configuration

Please control the fixture by referring to the configurations below.

Attentions:

- The unit will maintain the last condition until reset if you cut-off the DMX signal.
- For the channel Function, keep the value for about 3 seconds, then the corresponding function will take into effect.

6 Channels (Mode 1):

CHANNEL	VALUE	FUNCTION
1	000-255	RED 0%→100%
2	000-255	GREEN 0%→100%
3	000-255	BLUE 0%→100%
4	000-255	WHITE 0%→100%
5	000-255	DIMMER 0%→100%
6	000-005 006-123 124-127 128-185 186-190 191-249 250-255	STROBE Open Flash Rate, Slow to Fast Open 2 LEDs Random Strobe at the same time Open 2 LEDs Random Strobe respectively Open

7 Channels (Mode 2):

CHANNEL	VALUE	FUNCTION
1	000-255	RED 0%→100%
2	000-255	GREEN 0%→100%
3	000-255	BLUE 0%→100%
4	000-255	WHITE 0%→100%
5	000-007 008-015 016-022 023-030 031-037 038-045 046-052 053-060 061-067 068-075 076-082	COLOR MACRO Null Color 1 Color 2 Color 3 Color 4 Color 5 Color 6 Color 7 Color 8 Color 9 Color 10

	083-090 091-097 098-105 106-112 113-120 121-127 128-135 136-142 143-150 151-157 158-165 166-172 173-180 181-187 188-195 196-202 203-210 211-217 218-225 226-232 233-240 241-247 248-255	Color 11 Color 12 Color 13 Color 14 Color 15 Color 16 Color 17 Color 18 Color 19 Color 20 Color 21 Color 22 Color 23 Color 24 Color 25 Color 26 Color 27 Color 28 Color 29 Color 30 Color 31 Color 32 Color 33
6	000-255	**DIMMER** 0%→100%
7	000-005 006-123 124-127 128-185 186-190 191-249 250-255	**STROBE** Open Flash Rate, Slow to Fast Open 2 LEDs Random Strobe at the same time Open 2 LEDs Random Strobe respectively Open

10 Channels (Mode 3):

CHANNEL	VALUE	FUNCTION
1	000-255	**RED 1** 0%→100%
2	000-255	**GREEN 1** 0%→100%
3	000-255	**BLUE 1** 0%→100%
4	000-255	**WHITE 1** 0%→100%
5	000-255	**RED 2** 0%→100%
6	000-255	**GREEN 2** 0%→100%
7	000-255	**BLUE 2** 0%→100%
8	000-255	**WHITE 2** 0%→100%
9	000-255	**DIMMER** 0%→100%
10	000-005 006-123 124-127 128-185 186-190 191-249 250-255	**STROBE** Open Flash Rate, Slow to Fast Open 2 LEDs Random Strobe at the same time Open 2 LEDs Random Strobe respectively Open

HSIC Channels (Mode 4):

CHANNEL	VALUE	FUNCTION
1		COLOR MACRO
	000-007	Color 1
	008-015	Color 2
	016-023	Color 3
	024-031	Color 4
	032-039	Color 5
	040-047	Color 6
	048-055	Color 7
	056-063	Color 8
	064-071	Color 9
	072-079	Color 10
	080-087	Color 11
	088-095	Color 12
	096-103	Color 13
	104-111	Color 14
	112-119	Color 15
	120-127	Color 16
	128-135	Color 17
	136-143	Color 18
	144-151	Color 19
	152-159	Color 20
	160-167	Color 21
	168-175	Color 22
	176-183	Color 23
	184-191	Color 24
	192-199	Color 25
	200-207	Color 26
	208-215	Color 27
	216-223	Color 28
	224-231	Color 29
	232-239	Color 30
	240-247	Color 31
	248-255	Color 32
2		SATURATION
	000-255	0%→100%
3		DIMMER
	000-255	0%→100%
4		COLOR TEMPERATURE
	000-008	Null
	009-255	2000K→10000K

07/ Error Information

Error codes are shown continuously in the display when the fixture fails and they will not disappear until the fixture is repaired.

Err 1: Communication failure of main and auxiliary boards

Check whether the plug of the communication line is installed in place or disconnected.

Check whether the related circuit of the PCB board is damaged.

Err 2: Led Temp. Error

Check whether the lead on the temperature detecting board is installed in place or disconnected.

Check whether the thermistor is damaged.

Check whether the related circuit of the PCB board is damaged.

08/ Troubleshooting

Following are a few common problems that may occur during operation. Here are some suggestions for troubleshooting:

A. The unit does not work, no light and the fan does not work

- Check the connected power.
- Measure the voltage.
- Check the power indicator to see whether it can be lit up or not.

B. Not responding to the DMX controller

- Check whether the DMX connectors and the DMX cables are connected correctly.
- Check whether the DMX address is correctly set.
- If the intermittent DMX signal problem occurs, check whether the XLR socket and the signal cable are well connected.
- Try it with another DMX controller.
- Check whether the DMX cables run near or alongside to the high-voltage cables, which may damage or interfere with the signal circuit.

09/ Fixture Cleaning

It is absolutely essential that the fixture is kept clean to ensure the maximum light-output and allow the fixture to function reliably throughout its life. The fixture must be cleaned regularly to avoid dust, dirt and smoke-fluid residues building up on or within the fixture. The cleaning frequency depends on the application environment. Clean the fixture immediately if the dust enters it to avoid damage to the optical lens due to excessive dust.

- A soft lint-free cloth moistened with any good glass cleaning fluid is recommended, under no circumstances should solvents be used.
- Always dry the parts carefully.
- Clean the external optical lens at least every 20 days.

Declaration of Conformity

We declare that our products (lighting equipments) comply with the following specification and bears CE mark in accordance with the provision of the Electromagnetic Compatibility (EMC) Directive 2014/30/EU.

EN 55032: 2015+A1: 2020; EN 55035: 2017+A11: 2020;
EN IEC 61000-3-2: 2019+A1: 2021;
EN 61000-3-3: 2013+A1: 2019+A2: 2021.

&
Harmonized Standard

EN IEC 60598-2-17: 2018;
EN IEC 60598-1: 2021/A11: 2022.
Safety of household and similar electrical appliances
Part 1: General requirements and tests

www.acme.com.cn