STAGE PAR CCT
STAGE PAR CCT D15

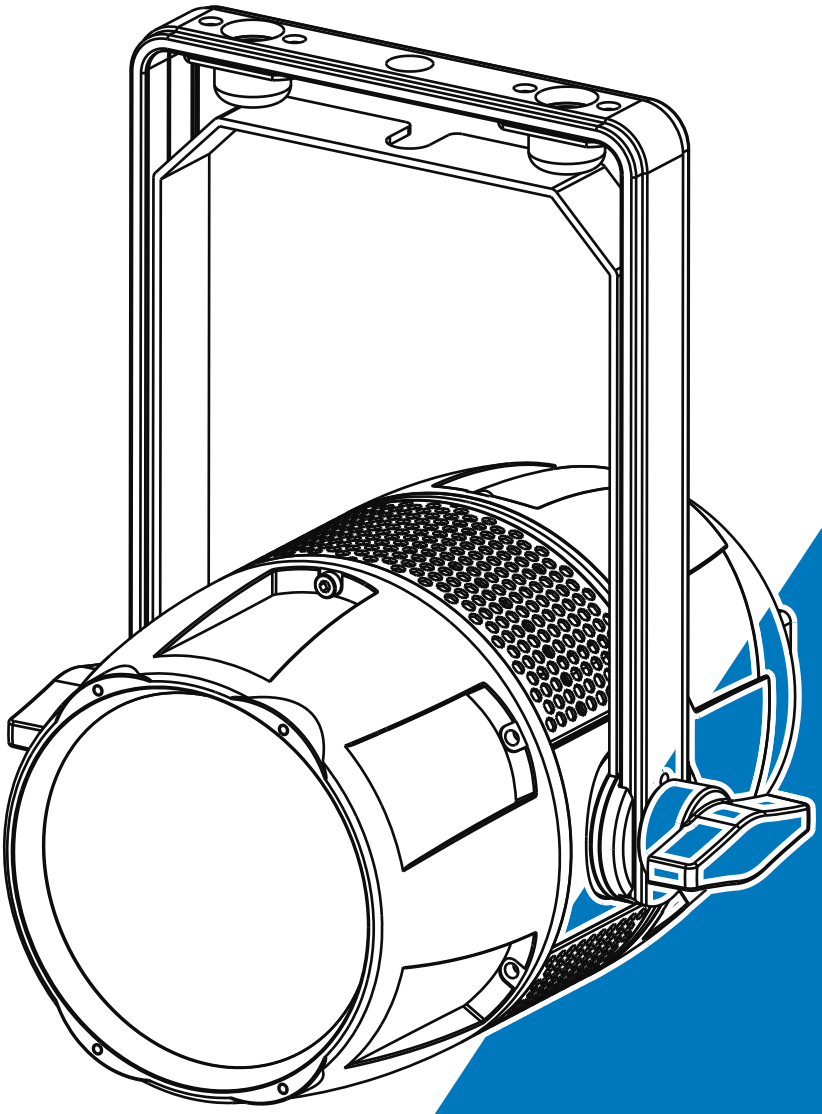

User Manual

Please read the instruction carefully before use

Menu

1. Safety Instructions 2

2. Technical Specifications 3

3. Installation and Connection 4

4. How to set the unit 4

4.1 Rear Panel 4

4.2 Main Function 5

5. How to control the unit 8

6. DMX512 configuration 8

7. DMX512 Connection 9

8.Troubleshooting 10

9. Fixture Cleaning 11

1. Safety Instructions

WARNING

Please read the instruction carefully which includes important information about the installation, usage and maintenance.

- Please keep this User Manual for future consultation. If you sell the fixture to another user, be sure that they also receive this instruction booklet.
- Please unpack and check carefully there is no transportation damage before using the fixture.
- Please disconnect main power before servicing and maintenance.
- The unit must be installed in a location with adequate ventilation, at least 50cm from adjacent surfaces. Be sure that no ventilation slots are blocked.
- The maximum ambient temperature is Ta: 40℃. DO NOT operate it where the temperature is higher than this.
- DO NOT connect the device to any dimmer pack.
- The housing must be replaced if they are visibly damaged.
- Unit surface temperature may reach up to 60℃. Don't touch the housing bare-hand during its operation. Turn off the power and allow about 15 minutes for the unit to cool down before replacing or serving.
- There are no user serviceable parts inside the fixture. Do not open the housing or attempt any repairs by yourself. In the unlikely event your fixture may require service.

- In the event of serious operating problem, stop using the fixture immediately. Never try to repair the fixture by yourself. Repairs carried out by unskilled people can lead to damage or malfunction. Please contact the nearest authorized technical assistance center. Always use the same type spare parts.

For AC 220-240V power supply, the maximum fixtures that can be connected on one power cable is 20(including the first fixture) ;
For AC 100~120V power supply, the maximum fixtures that can be connected on one power cable is 15 (including the first fixture).

2. Technical Specifications

- channel Mode : 2/3/4/5/CH Channel Modes(BL-100VW); 2/4/5/CH Channel Modes(BL-100VW D15);
- Dimmer, Strobe;
- Ideal for Professional stages, Concerts, clubs, discotheques, Mobile DJs, etc.
- **Input Voltage:** AC 100~240V, 50/60Hz
- **Total Power consumption:** 90W
- **Beam Angle:** BL-100VW 50°/ BL-100VW D15 15°
- **IP Grade:** IP 65
- **LED Sources:** 126W LED
- **Color Temperature:** 2700K-6500K
- **Dimension/Weight:**
  247x234x307mm, 4.2Kg
  9.7"x9.2"x12.0"in, 9.3lbs

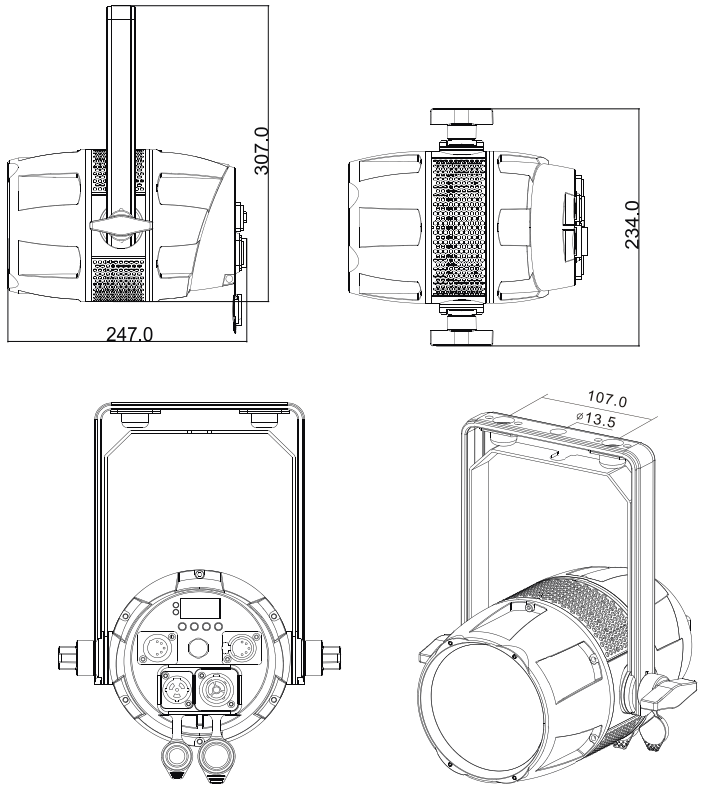

3. Installation and Connection

The unit should be mounted via its screw holes on the bracket. Always ensure that the unit is firmly fixed to avoid vibration and slipping while operating. Always ensure that the structure to which you are attaching the unit is secure and is able to support a weight of 10 times of the unit's weight. Also always use a safety cable that can hold 12 times of the weight of the unit when installing the fixture.

The equipment must be fixed by professionals. And it must be fixed at a place where is out of the touch of people and has no one pass by or under it. The unit should be mounted in the height of 0 to 30m.

4. How to set the unit

4.1 Rear Panel

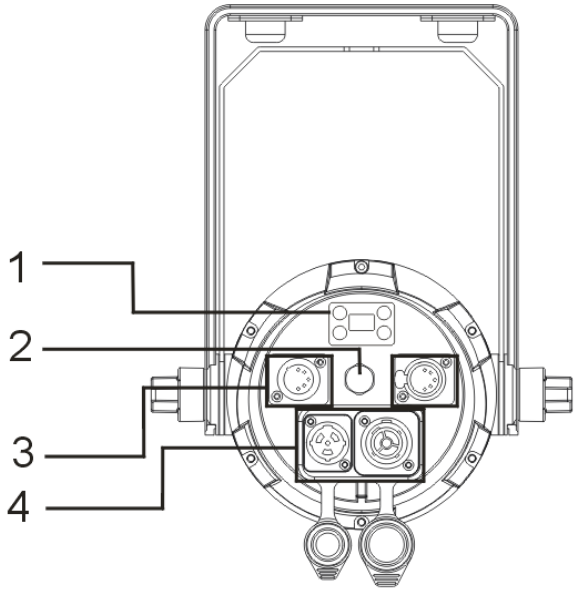

① Display & Button

MENU	To select the programming functions
DOWN	To go forward in the selected functions
UP	To go backward in the selected functions
ENTER	To confirm the selected functions

② Through the air valve

③ **DMX input/output:**

For DMX512 link, use 5-pin XLR plug cable to input DMX signal, and to link the next unit.

④ **Mains input/output:：** Use Powercon true one mains connection.

4.2 Main Function

To select any functions, press **MENU** button until the required one is shown on the display. Select the function by **ENTER** button. Use **DOWN** and UP button to change the mode. Once the required mode has been selected, press **ENTER** button to setup or it will return to the main functions without any change after idling 30 seconds automatically. Back to the functions without any change press **MENU** button. The main functions are shown below:

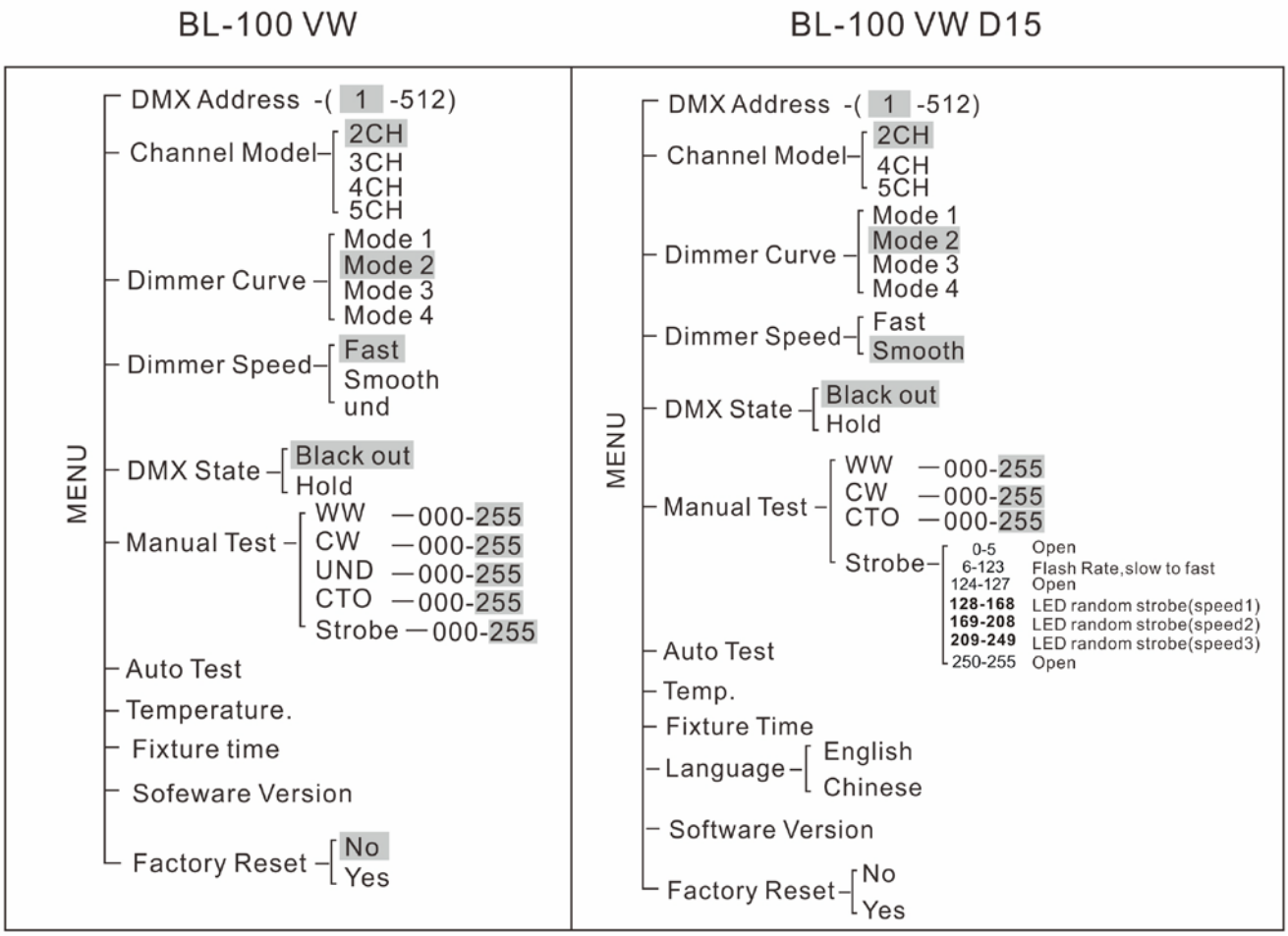

DMX 512 Address Setting

Select the **DMX Address**, press the **ENTER** button and the display will blink. Use the **DOWN** and **UP** button to change the DMX 512 address（001-512）. Once the address has been selected, press the **ENTER** button to setup or exit menu mode without any change after 30 seconds automatically. Back to the previous functions without any change press the **MENU** button.

Channel Model

Select the **Channel Modl**, press the **ENTER** button. Use the **DOWN** and **UP** button to select the 2CH /4CH/5CH channel mode , Once selected, press the **ENTER** button to setup or exit menu mode without any change after 30 seconds automatically. To go back to the functions without any change press the **MENU** button

Dimmer Curve

Select the **Dimmer Curve**, press the **ENTER** button. Use the **DOWN** and **UP** button to select Mode 1…Mode 4. Once selected, press the **ENTER** button to setup or exit menu mode without any change after 30 seconds. Back to the functions without any change press the **MENU** button again.

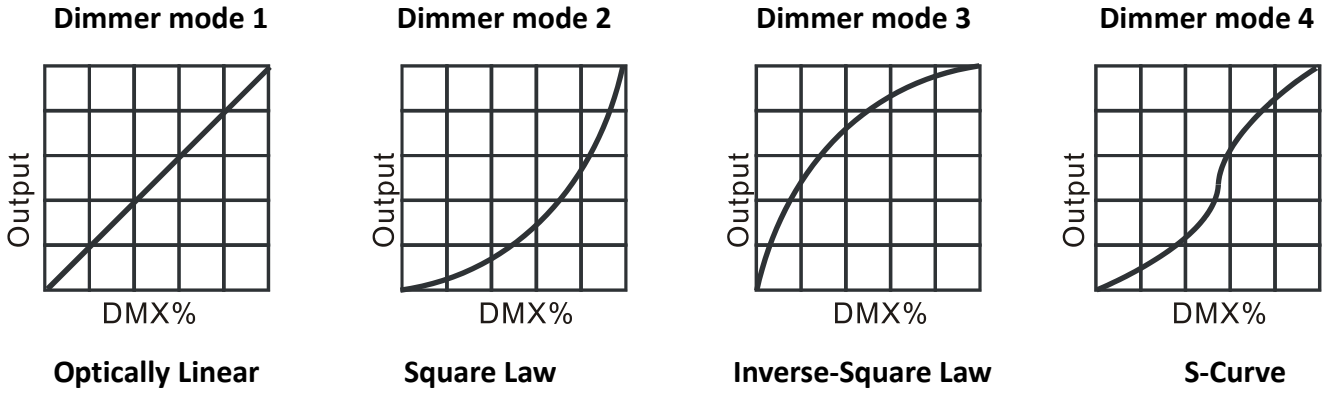

Mode 1(Optically Linear): The increase in light intensity appears to be linear as DMX value is increased.

Mode 2(Square Law): Light intensity control is finer at low levels and coarser at high levels.

Mode 3(Inverse Square Law): Light intensity control is coarser at low levels and finger at high levels.

Mode 4(S-cure): Light intensity control is finger at low levels and high levels and coarser at medium levels.

Dimmer Speed

Select the **Dimmer Speed**, press the **ENTER** button. Use the **DOWN** and **UP** button to select Fast /Smooth, Once selected, press the **ENTER** button to setup or exit menu mode without any change after 30 seconds. Back to the functions without any change press the **MENU** button again.

DMX State

Select the **DMX State**, press the **ENTER** button. Use the **DOWN** and **UP** button to select Black out/ Hold , Once selected, press the **ENTER** button to setup or exit menu mode without any change after 30 seconds. Back to the functions without any change press the **MENU** button again.

Manual Test

Select the **Manual Test**, press the **ENTER** button. use the **DOWN** and **UP** button to select WW/CW /UND/CTO (Color Temperature: 2700K-5600K) /Strober, You can choose values between 0-255, When the value of CTO is greater than 0, the values of WW and CW are invalid. When the value of the UND is greater than 0, the value of the WW/CW/CTO is invalid. And press the ENTER button to setup or automatically exit menu mode without any change after 30 seconds. To go back to the functions without any change press the MENU button

Auto Test

Select the **Auto Test**, press the **ENTER** button and the unit will run self-test by built-in program. To go back to the functions press the MENU button again. Hold and press the MENU button about one second or wait for one minute to exit the menu mode.

Temp

Select the **Temp**, press **ENTER** button and the display will show the temperature. To go back to the functions press the **MENU** button.

Fixture Time

Select the Fixture Time, press **ENTER** button and the display will show the number of working hours of the unit. To go back to the functions press the **MENU** button.

Firmware Version

Select the **Firmware Version**, press **ENTER** button and the display will show the version of software of the unit. To go back to the functions press the **MENU** button.

5. How to control the unit

1. By DMX controller；

No need to turn the unit off when you change the DMX address, as new DMX address setting will be affected at once. Turn on the unit, under the DMX signal , the LED will display the saved channel address （001-512）.

6. DMX512 configuration

Channel Mode：

BL-100 VW

2Channel model

Channel	Value	Function
1	0-255	WW Dimmer 0→100%
2	0-255	CW Dimmer 0→100%

3 Channel model (UND)

Channel	Value	Function
1	0-255	Dimmer 0→100%
2	0-255	Dimmer Fine 0→100%
3 Strobe	0-5	Open
	6-123	Flash Rate,slow to fast
	124-127	Open
	128-168	LED random strobe(speed1)
	169-208	LED random strobe(speed2)
	209-249	LED random strobe(speed3)
	250-255	Open

4 Channel model (CTO)

Channel	Value	Function
1	0-255	CTO 2700K→ 5600K
2	0-255	Dimmer 0→100%
3	0-255	Dimmer Fine 0→100%
4 Strobe	0-5	Open
	6-123	Flash Rate,slow to fast
	124-127	Open
	128-168	LED random strobe(speed1)
	169-208	LED random strobe(speed2)
	209-249	LED random strobe(speed3)
	250-255	Open

5 Channel model

Channel	Value	Function
1	0-255	WW Dimmer 0→100%
2	0-255	CW Dimmer 0→100%
3	0-255	Total Dimmer 0→100%
4	0-255	Dimmer Fine 0→100%
5 Strobe	0-5	Open
	6-123	Flash Rate,slow to fast
	124-127	Open
	128-168	LED random strobe(speed1)
	169-208	LED random strobe(speed2)
	209-249	LED random strobe(speed3)
	250-255	Open

BL-100 VW D15

2Channel model

Channel	Value	Function
1	0-255	WW Dimmer 0→100%
2	0-255	CW Dimmer 0→100%

4 Channel model (CTO)

Channel	Value	Function
1	0-255	CTO 2700K→ 5600K
2	0-255	Dimmer 0→100%
3	0-255	Dimmer Fine
4 Strobe	0-5	Open
	6-123	Flash Rate,slow to fast
	124-127	Open
	128-168	LED random strobe(speed1)
	169-208	LED random strobe(speed2)
	209-249	LED random strobe(speed3)
	250-255	Open

5 Channel model

Channel	Value	Function
1	0-255	WW Dimmer 0→100%
2	0-255	CW Dimmer 0→100%
3	0-255	Total Dimmer 0→100%
4	0-255	Dimmer Fine
5 Strobe	0-5	Open
	6-123	Flash Rate,slow to fast
	124-127	Open
	128-168	LED random strobe(speed1)
	169-208	LED random strobe(speed2)
	209-249	LED random strobe(speed3)
	250-255	Open

7. DMX512 Connection

Mode connection：

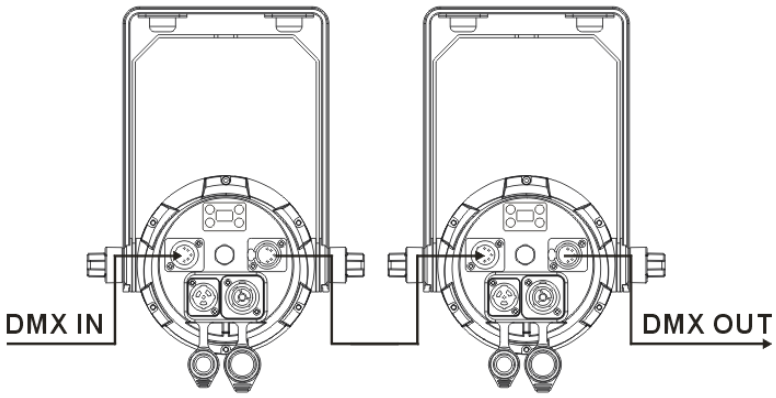

1. Connect the fixture together in a “daisy chain” by XLR plug cable from the output of the fixture to the input of the next fixture. The cable cannot be branched or split to a “Y” cable. Inadequate or damaged cables, soldered joints or corroded connectors can easily distort the signal and shut down the system
2. The DMX output and input connectors are pass-through to maintain the DMX circuit when one of the units’ power is disconnected.
3. At last fixture, the DMX cable has to be terminated with a terminator to reduce signal errors. Solder a 120-ohm 1⁄4W resistor between pin 2(DMX-) and pin 3(DMX+) into a 5-pin XLR-plug and plug it in the DMX-output of the last fixture.
4. Each lighting fixture needs to have an address set to receive the data sent by the controller. The address number is between 0-511 (usually 0 & 1 are equal to 1).
5. 5 pin XLR connectors:.

   5 pin XLR: Pin 1: GND, Pin 2: Negative signal (-), Pin 3: Positive signal (+) 4:Blank 5:Blank

8.Troubleshooting

Following are a few common problems that may occur during operation. Here are some suggestions for easy troubleshooting:

A. The fixture does not work, no light

1. Check the connection of power and main fuse.
2. Measure the mains voltage on the main connector.

B. Not responding to DMX controller

1. DMX LED should be on. If not, check DMX connectors, cables to see if link properly.
2. If the DMX LED is on and no response to the channel, check the address settings and DMX polarity.
3. If you have intermittent DMX signal problems, check the pins on connectors or on PCB of the fixture or the previous one.
4. Try to use another DMX controller.
5. Check if the DMX cables run near or run alongside to high voltage cables that may cause damage or interference to DMX interface circuit.

C Error code

F**an.Error**

Check whether the fan is stopped

Check whether PCB related detection circuit is damaged

Temp.Error

Check whether the test leads are in good contact and disconnected

Check if the thermistor is broken

Check PCB related circuit for damage

Cpu-B Error Main and auxiliary board communication fault check whether the main and auxiliary board communication cable plugs are connected normally

9. Fixture Cleaning

The cleaning of internal must be carried out periodically to optimize light output. Cleaning frequency depends on the environment in which the fixture operates: damp, smoky or particularly dirty surrounding can cause greater accumulation of dirt on the fixture's optics.

- Clean with soft cloth using normal glass cleaning fluid.
- Always dry the parts carefully.
- Clean the external optics at least every 20 days.

Declaration of Conformity

We declare that our products (lighting equipments) comply with the following specification and bears CE mark in accordance with the provision of the Electromagnetic Compatibility (EMC) Directive 2004/108/EC.

EN55103-1: 2009 ; EN55103-2: 2009;
EN61000-3-2: 2006 + A1:2009 + A2:2009; EN61000-3-3: 2008.

&

Harmonized Standard

EN 60598-1:2008 + All:2009; EN 60598-2-17:1989 + A2:1991;
EN 62471:2008; EN 62493: 2010
Safety of household and similar electrical appliances
Part 1: General requirements

Innovation, Quality, Performance