ULTRA BLINDER IP

BL 200 IP

Light Source

2 x 260W RGBA+WW LED

Beam Angle

49°

Field Angle

82°

Protection Rating

IP66

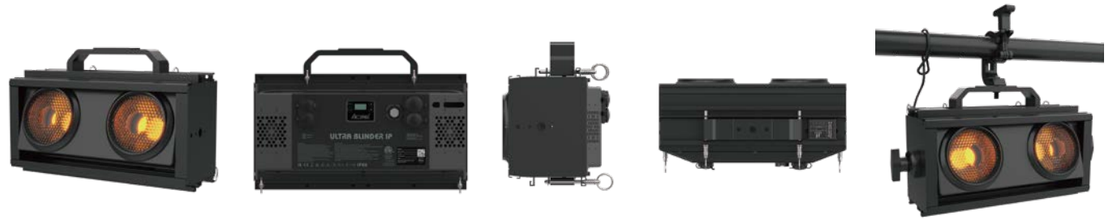

Main Features

Light Source: 2 x 260W RGBA+WW LED

Beam Angle: 49°

Field Angle: 82°

Total Lumen Output of Fixture: 14,700 lumens

Variable CTO ranging from 2,500K-8,000K

Tungsten emulation during dimming

Outstanding color mixing

Outstanding strobe effect with variable speed

Smooth dimming 0-100%

IP66 rated

Two light heads can be adjusted up and down at the same time

Integrated interlocking system for combining units

Technical Specifications

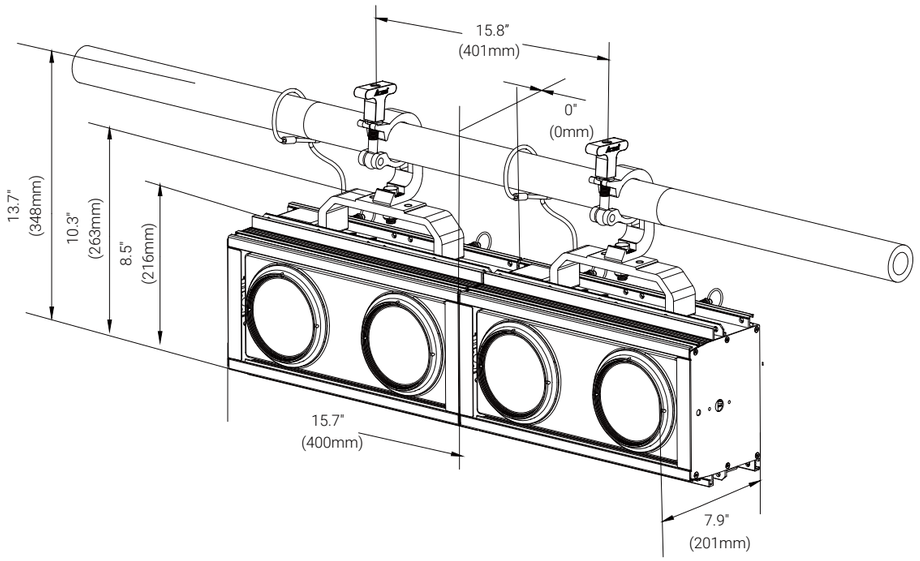

Light Source

· Light Source: 2 x 260W RGBA+WW LED
· Total Lumen Output of Fixture: 14,700 lumens
· Life Expectancy: 20,000 hours*

*Source manufacturer specification

Optical System

· Beam Angle: 49°
· Field Angle: 82°

Colors

· Linear CTO Color Correction: 2,500K-8,000K

Other Effects

· Tungsten emulation during dimming
· Outstanding color mixing
· Two light heads can be adjusted up and down at the same time
· Outstanding strobe effect with variable speed
· Smooth dimming 0-100%

Control

· 4 touch button control panel
· Display: LCD display
· Protocols: DMX512, RDM
· DMX Protocol Modes: 11
· Control Channels: 1/2/4/6/ 6/7/9/10/11/14/16
· Firmware Upgrade: Upgrade via DMX link

Electrical and Connectors

· Input Voltage Range: 100-240Vac; 50/60Hz
· Power Consumption: 235W
· Power In/Out: Waterproof power connector in/out
· Data In/Out: 3-pin or 5-pin waterproof XLR
· Maximum Quantity of Connections:
230V, 50Hz: 12 units
120V, 60Hz: 6 units

Physical Information

· Fixture Dimensions:
400 x 201 x 263 mm (15.7" x 7.9" x 10.4")
Weight: 8.2 kg (18.1 lbs)

Packing Information

· Flight Case Dimensions:
1,220 x 610 x 690 mm (48.0" x 24.0" x 27.2")
Weight:
Standard:
G.W.: 127.0 kg (280.0 lbs) (eight-pack loader case)
North American Standard:
G.W.: 134.1 kg (295.6 lbs) (eight-pack loader case)
· Carton Dimensions:
565 x 315 x 290 mm (22.2" x 12.4" x 11.4")
Weight:
G.W.: 11.5 kg (25.4 lbs) (one-pack loader carton)

Work Environment

· Maximum Ambient Temperature: 40°C
· Minimum Operating Temperature: -10°C
· Maximum Surface Temperature: 65°C
· Protection Rating: IP66

Installation

· Horizontal or vertical mounting
· Universal working position
· 1 clamp for 50 mm truss
· 1 omega bracket
· Integrated interlocking system for combining units
· Vertical: Using one small hanging bracket (supplied) with clamp (by others), a maximum of 4 fixtures may be connected
· Using one or two small hanging brackets (supplied) with clamp (by others), a maximum of 2 layers (3 fixtures) may be connected
· Utilizing one large double vertical hanging bracket assembly (sold separately), a maximum of 2 fixtures may be connected
· Safety cable attachment point

Included Items

· Digital user manual
· Power cable
· Small hanging bracket (50137301701100)

Optional Accessories (With Order Code)

· Flight Case:
Standard : Eight-pack loader case (63583607)
North American Standard : Eight-pack loader case (63583608)
· Clamps: C-250B (2060001632-B)
· Safety Cable: SW-05 (2060001603-A)
· Signal Cable: 3-pin waterproof signal cable (3017013468) or 5-pin waterproof signal cable (3017013473)
· Large Hanging Bracket w/o Omega Bracket: 63582342
· Large Hanging Bracket w/ Omega Bracket: 63583658
· Large Double Vertical Hanging Bracket Assembly: 63580738
· Omega Bracket: 3002003002

Max. 3 fixtures

Max. 3 fixtures

Mounting Options

Large Hanging Bracket
w/o Omega Bracket (63582342)

Max. 1 fixture

Large Hanging Bracket
w/ Omega Bracket: 63583658

Max. 4 fixtures

Large Double Vertical Hanging Bracket Assembly
(63580738)

Max. 2 fixtures

Small hanging bracket
(50137301701100)

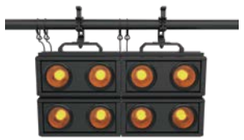

Max. 4 fixtures

Max. 4 fixtures

Max. 4 fixtures

Photometric (Images)

Beam Angle:

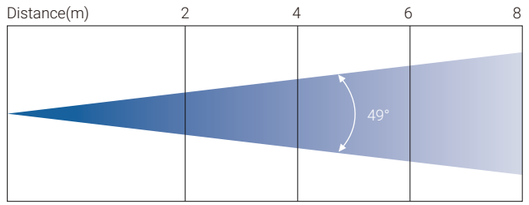

49° RGBA Lux	2,700	675	300	169
49° WW Lux	5,650	1,413	628	353
Diameter(m)	1.8	3.6	5.5	7.3

Field Angle:

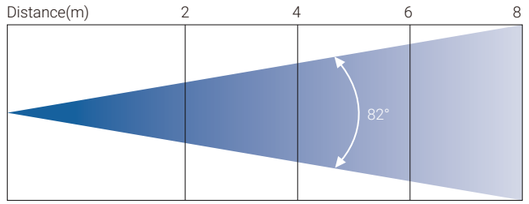

82° RGBA Lux	2,700	675	300	169
82° WW Lux	5,650	1,413	628	353
Diameter(m)	3.5	3.9	10.4	13.8

Specifications subject to change without notice.
29/09/2026