PIXEL LINE SLIM 500

Slim by Design. Integrated Power Supply.

SPEC SHEET



Foshan YiFeng Electric Industrial Co.,Ltd.
No.898, Gaoming Avenue East, Hecheng Blvd, Gaoming District, Foshan, Guangdong, China.
Web: www.acmelighting.com Email: sales@acmelighting.com
All rights reserved by Acme®. Features, specifications and appearance are subject to change without notice.
REV: 09/11/2026

PIXEL LINE SLIM 500

Slim by Design. Integrated Power Supply.

SPEC SHEET

FIXTURE OVERVIEW

- The ACME **PIXEL LINE SLIM 500** delivers the full creative capabilities of the PIXEL LINE SLIM in a compact half-meter format, making it ideal for productions with limited space and rigging capacity.The **PIXEL LINE SLIM 500** also can be connected side by side with the PIXEL LINE SLIM, offering greater flexibility in lighting layout.



- Equipped with 24 × 1.2W RGB, warm white, and cool white LEDs, the fixture produces vibrant colors and smooth color mixing. The warm white source achieve an ultra-high color rendering of Ra≥98, ensuring accurate reproduction of skin tones and scenic details. Individual pixel control and built-in color macro effects enable dynamic color chases, while high-energy strobe effects add rhythmic intensity and visual impact to every performance.

- Featuring a lightweight and ultra-slim design, the **PIXEL LINE SLIM 500** simplifies transportation, handling, and deployment. It supports both horizontal and floor mounting, functioning as either a strip light or footlight. Combining power and data in a single connector reduces cabling complexity and improves setup efficiency.

- For added creative flexibility, three optional diffuser types, each available in smoked or white, transform defined pixel looks into smooth, continuous lines and clean geometric forms. An optional junction bar allows fixtures to be connected and adjusted to multiple angles, expanding installation possibilities.

- With an IP66 rating, the **PIXEL LINE SLIM 500** delivers reliable performance in demanding outdoor environments. Combining versatility and efficiency in a compact form, the fixture adapts effortlessly to concerts, live events, and architectural lighting.

FEATURE HIGHLIGHTS

- Light Source: 24 x 1.2W RGB/WW/CW LEDs
- Beam Angle: 66°
- Field Angle: 112°
- Fixture Luminous Output: 1,320 lumens
- CCT:
  2,700K (WW)
  6,500K (CW)
- Color Rendering:
  Ra≥98 (WW)
  Ra≥96 (CW)
- Outstanding strobe effect with variable speed
- Smooth dimming 0-100% (4 user selectable dimming curves)

Foshan YiFeng Electric Industrial Co.,Ltd.
No.898, Gaoming Avenue East, Hecheng Blvd, Gaoming District, Foshan, Guangdong, China.
Web: www.acmelighting.com Email: sales@acmelighting.com
All rights reserved by Acme®. Features, specifications and appearance are subject to change without notice.
REV: 09/11/2026

PIXEL LINE SLIM 500

Slim by Design. Integrated Power Supply.

SPEC SHEET

FEATURE HIGHLIGHTS

- Individual pixel control and built-in color macro effects
- Excellent color mixing
- IP66 rated
- Built-in positioning system for combining units
- Max. Quantity of Connections with Built-In PSU:
  208-240V, 50Hz: 64 units
  100-125V, 60Hz: 32 units

TECHNICAL SPECIFICATIONS

Model

· Model Name: PIXEL LINE SLIM 500
· Model Code: SL 50 IP

Light Source

· Light Source: 24 x 1.2W RGB/WW/CW LEDs
· Life Expectancy: 20,000 hours*
*Source manufacturer specification

Photometric Data

· Fixture Luminous Output: 1,320 lumens
· CCT:
2,700K (WW)
6,500K (CW)
· Color Rendering:
Ra≥98 (WW)
Ra≥96 (CW)

Optical System

· Beam Angle: 66°
· Field Angle: 112°

Control & Program

· 4 touch button control panel
· Display: LCD display
· Protocols: DMX512 (via JBOX Plus), RDM, Art-Net, sACN
· Setting and Addressing: Display menu, RDM
· DMX Modes: 9
· DMX Channels: 14/19/24/29/39/49/69/124/129
· Firmware Upgrade: Upgrade via Ethernet
(IU-02 firmware must be upgraded to V1.8 before using JBOX Plus to upgrade the PIXEL LINE SLIM 500)

Pan & Tilt

· Tilt: 180° (with floor stands)

Color Mixing

· Excellent color mixing

Electrical

· Input Voltage Range: 100-240Vac; 50/60Hz
· Power Consumption: 30W
· Power In/Out: Hybrid connectors in/out
· Max. Quantity of Connections with Built-In PSU:
208-240V, 50Hz: 64 units
100-125V, 60Hz: 32 units

Physical

· Weight: 1.6 kg (3.5 lbs)
· Width: 500 mm (19.7")
· Depth: 82 mm (3.2")
· Height: 42 mm (1.7")

Construction

· Housing: Aluminum
· Color: Black
· Protection Rating: IP66

Work Environment

· Maximum Ambient Temperature: 45°C
· Minimum Operating Temperature: -20°C
· Maximum Surface Temperature: 65°C

Foshan YiFeng Electric Industrial Co.,Ltd.
No.898, Gaoming Avenue East, Hecheng Blvd, Gaoming District, Foshan, Guangdong, China.
Web: www.acmelighting.com Email: sales@acmelighting.com
All rights reserved by Acme®. Features, specifications and appearance are subject to change without notice.
REV: 09/11/2026

PIXEL LINE SLIM 500

Slim by Design. Integrated Power Supply.

SPEC SHEET

TECHNICAL SPECIFICATIONS

Installation

· Universal working position
· Built-in positioning system for combining units
· Horizontal: Utilizing two floor stands (supplied) and two clamps (by others)
· Remove two floor stands (supplied) and install one junction bar (sold separately) to enable multi-angle adjustment
· Floor: Utilizing two floor stands (supplied)
· Safety cable attachment point

Approvals

· CE compliant
EMC directive 2014/30/EU
LVD directive 2014/35/EU
· UKCA compliant
Electromagnetic Compatibility Regulations 2016
Electrical Equipment (Safety) Regulations 2016
· cETLus compliant
UL 1573
CSA C22.2 #166

INCLUDED ITEMS

Included Items

· Digital user manual
· 2 floor stands(63584696)

ORDERING INFORMATION

Optional Accessories
(With Order Code)

· Flight Case
Standard: (TBD)
North American Standard: TBD
· Clamp: C-100 (2060001693)
· Safety Cable: SW-02 (2060000200-B)
· Junction Bar: 63584478
· Round Diffuser:
Smoked (3005006959), White (3005006956)
· Square Diffuser:
Smoked (3005006960), White (3005006957)
· Triangular Diffuser:
Smoked (3005006961), White (3005006958)
· JBOX (one power cable included)
· JBOX Plus (one power cable included)
· Hybrid Extension Cable:
0.5 m (3004000334), 1 m (3004000330),
2 m (3004000326), 5 m (3004000329),
10 m (3004000327), 20 m (3004000331)

Carton Dimensions

· Width: 610 mm (24")
· Depth: 300 mm (11.8")
· Height: 485 mm (19.1")
· Weight:
G.W.: 15.8 kg (34.8 lbs) (eight-pack loader carton)

Foshan YiFeng Electric Industrial Co.,Ltd.
No.898, Gaoming Avenue East, Hecheng Blvd, Gaoming District, Foshan, Guangdong, China.
Web: www.acmelighting.com Email: sales@acmelighting.com
All rights reserved by Acme®. Features, specifications and appearance are subject to change without notice.
REV: 09/11/2026

PIXEL LINE SLIM 500

Slim by Design. Integrated Power Supply.

SPEC SHEET

ORDERING INFORMATION

Flight Case

Standard: TBD

Included Accessories (Choose either JBOX or JBOX Plus)



C-100 (2060001693)



SW-02 (2060000200-B)



Hybrid Extension Cable: 2 m (3004000326)
*Optional Lengths: 0.5 m (3004000334),
1 m (3004000330), 5 m (3004000329),
10 m (3004000327), 20 m (3004000331)



JBOX (power cable included)



JBOX Plus (power cable included)

Optional Accessories



Junction Bar: 63584478



Round Diffuser :
Smoked (3005006959), White (3005006956)



Square Diffuser:
Smoked (3005006960), White (3005006957)



Triangular Diffuser:
Smoked (3005006961), White (3005006958)

Foshan YiFeng Electric Industrial Co.,Ltd.
No.898, Gaoming Avenue East, Hecheng Blvd, Gaoming District, Foshan, Guangdong, China.
Web: www.acmelighting.com Email: sales@acmelighting.com
All rights reserved by Acme®. Features, specifications and appearance are subject to change without notice.
REV: 09/11/2026

PIXEL LINE SLIM 500

Slim by Design. Integrated Power Supply.

SPEC SHEET

INSTALLATION DIAGRAM

1. Horizontal: Utilizing two floor stands (supplied) and two clamps (by others)

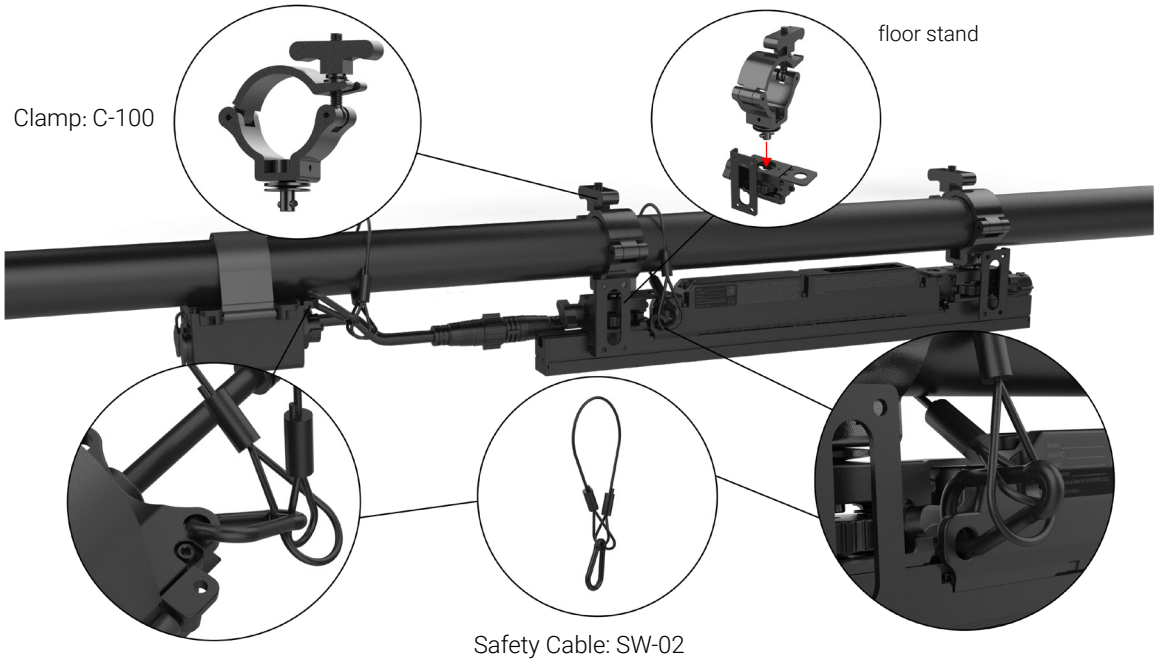

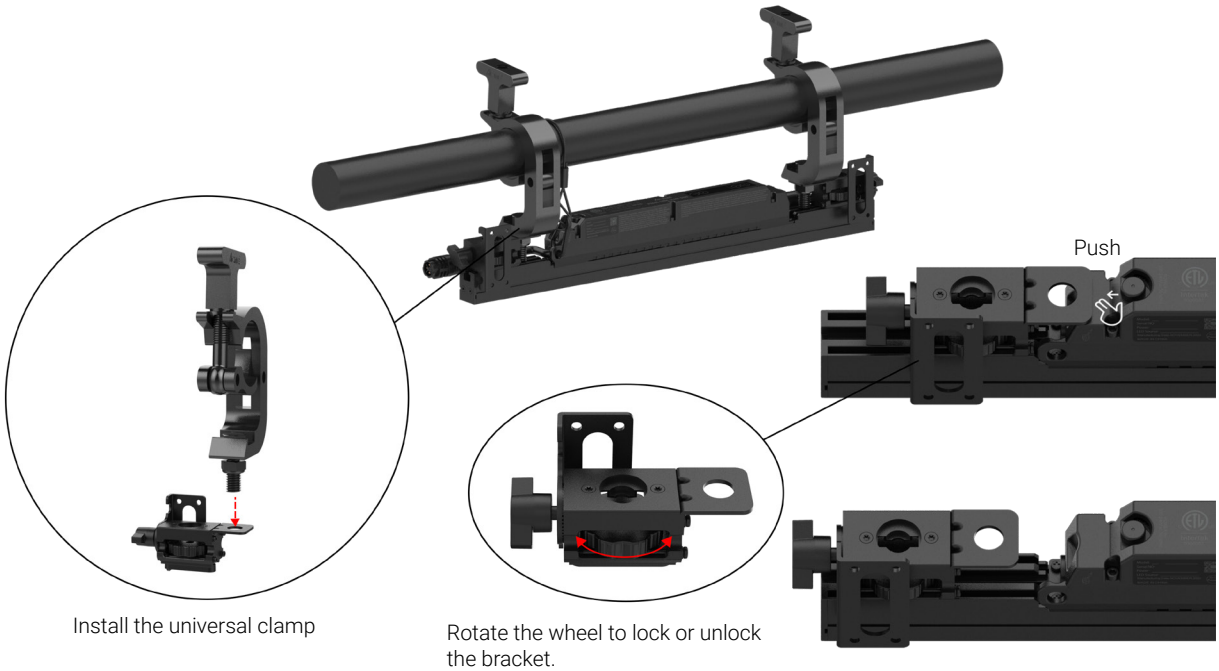

All rights reserved by Acme®. Features, specifications and appearance are subject to change without notice.

REV: 09/11/2026

INSTALLATION DIAGRAM

2. Remove two floor stands (supplied) and install one junction bar (sold separately) to enable multi-angle adjustment



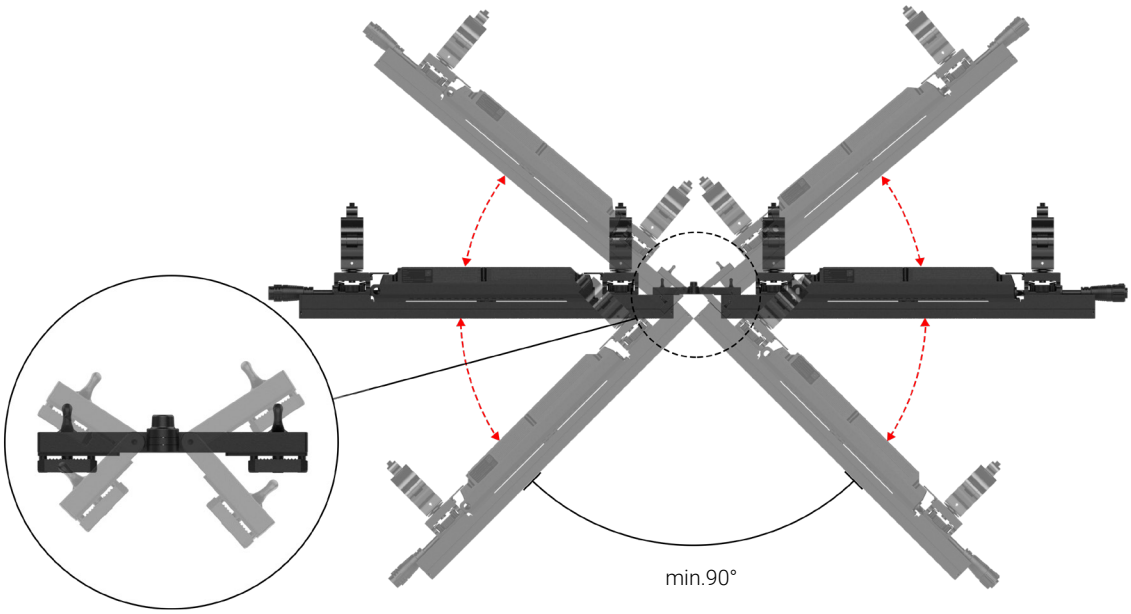

3. Floor: Utilizing two floor stands (supplied)

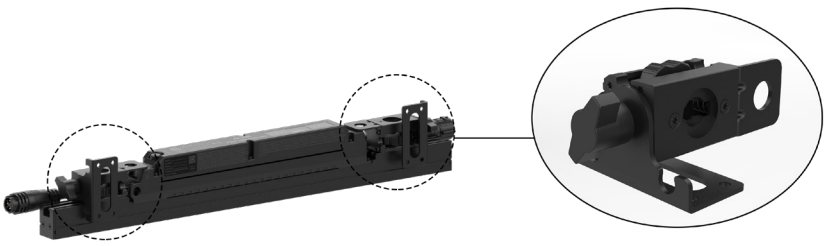

All rights reserved by Acme®. Features, specifications and appearance are subject to change without notice.

PIXEL LINE SLIM 500

Slim by Design. Integrated Power Supply.

SPEC SHEET

POWER & DATA CONNECTION DIAGRAM

Connect Fixture with JBOX or JBOX Plus

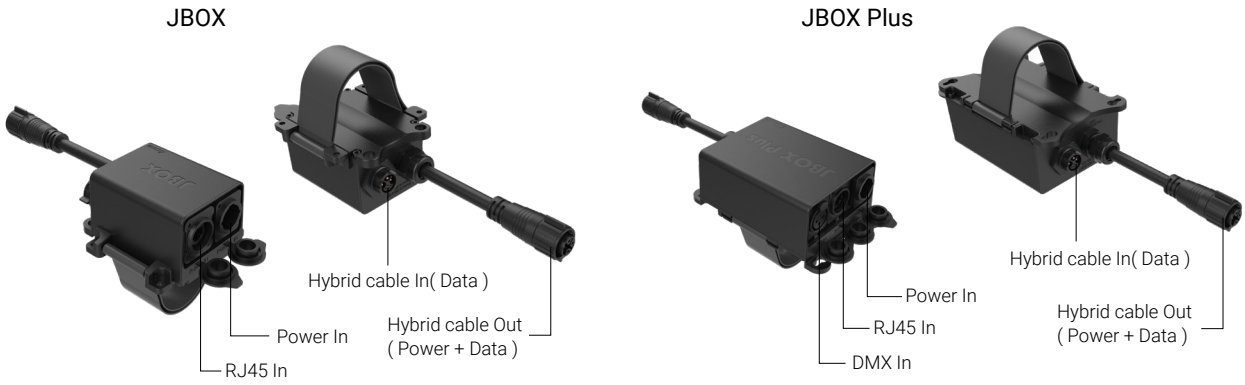

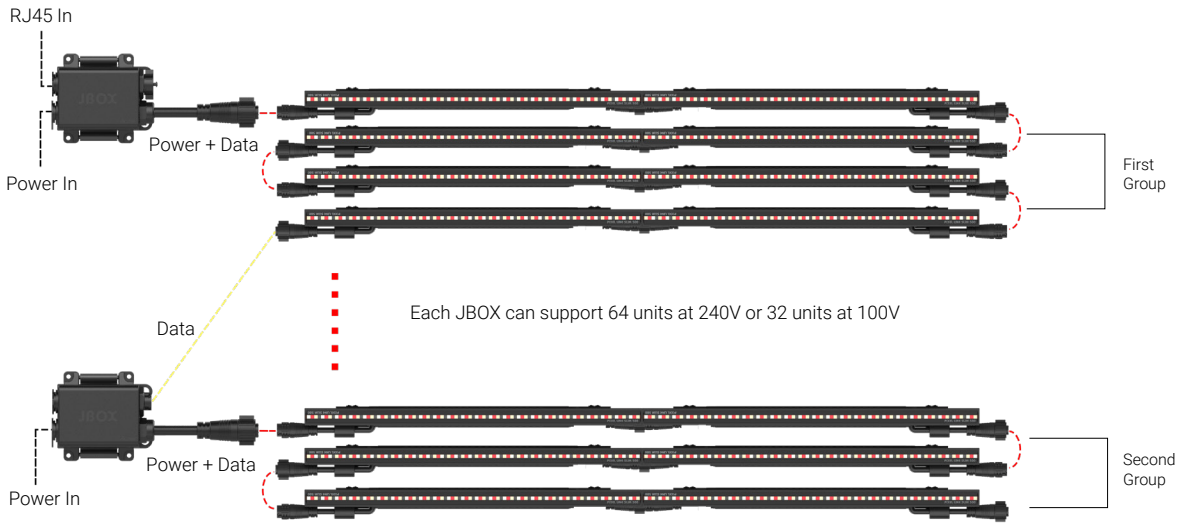

Foshan YiFeng Electric Industrial Co.,Ltd.
No.898, Gaoming Avenue East, Hecheng Blvd, Gaoming District, Foshan, Guangdong, China.
Web: www.acmelighting.com Email: sales@acmelighting.com

All rights reserved by Acme®. Features, specifications and appearance are subject to change without notice.

REV: 09/11/2026

PIXEL LINE SLIM 500

Slim by Design. Integrated Power Supply.

SPEC SHEET

(STANDARD) FLIGHT CASE

Foshan YiFeng Electric Industrial Co.,Ltd.
No.898, Gaoming Avenue East, Hecheng Blvd, Gaoming District, Foshan, Guangdong, China.
Web: www.acmelighting.com Email: sales@acmelighting.com
All rights reserved by Acme®. Features, specifications and appearance are subject to change without notice.
REV: 09/11/2026

PIXEL LINE SLIM 500

Slim by Design. Integrated Power Supply.

SPEC SHEET

DIMENSIONS

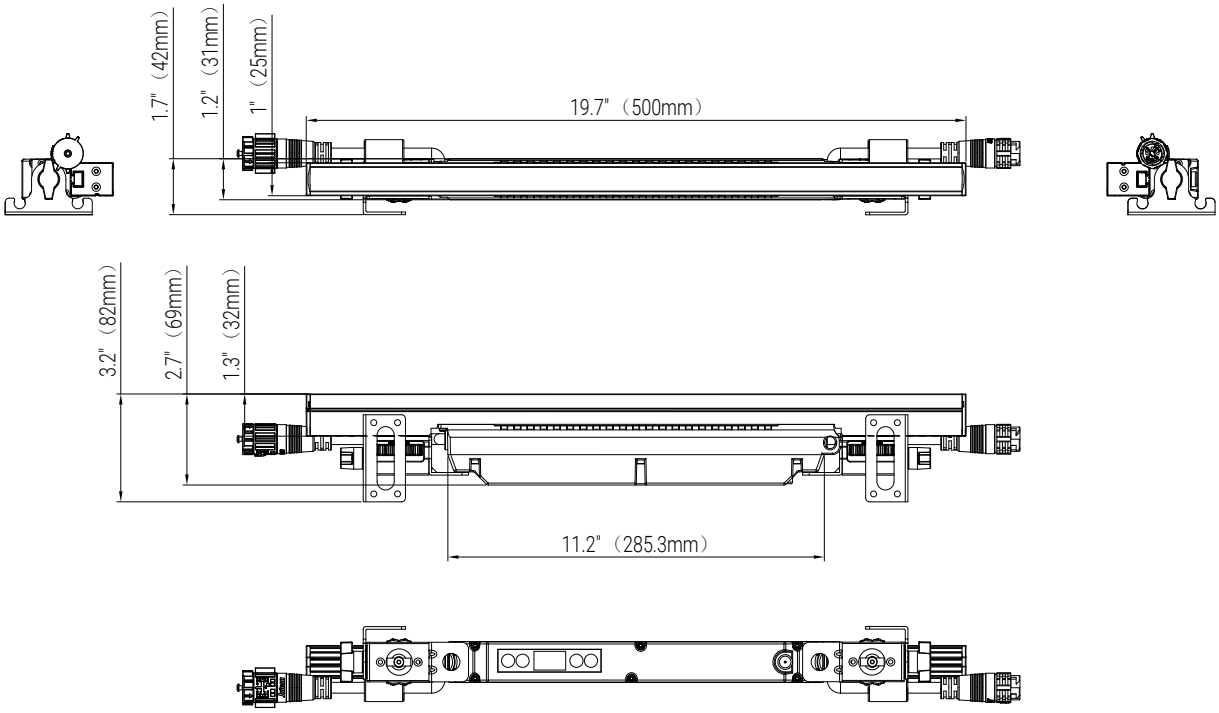

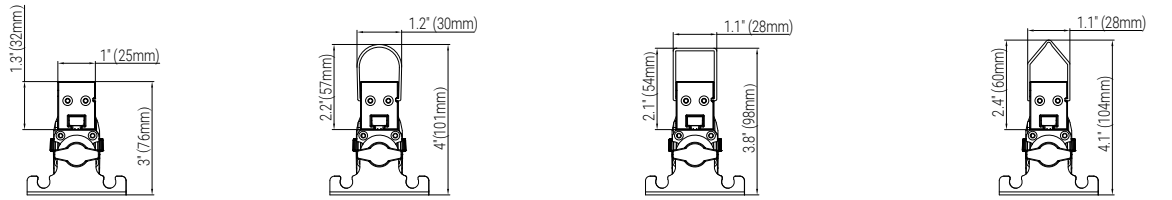

without any diffuser | with round diffuser | with square diffuser | with triangular diffuser

HANGING DIMENSIONS

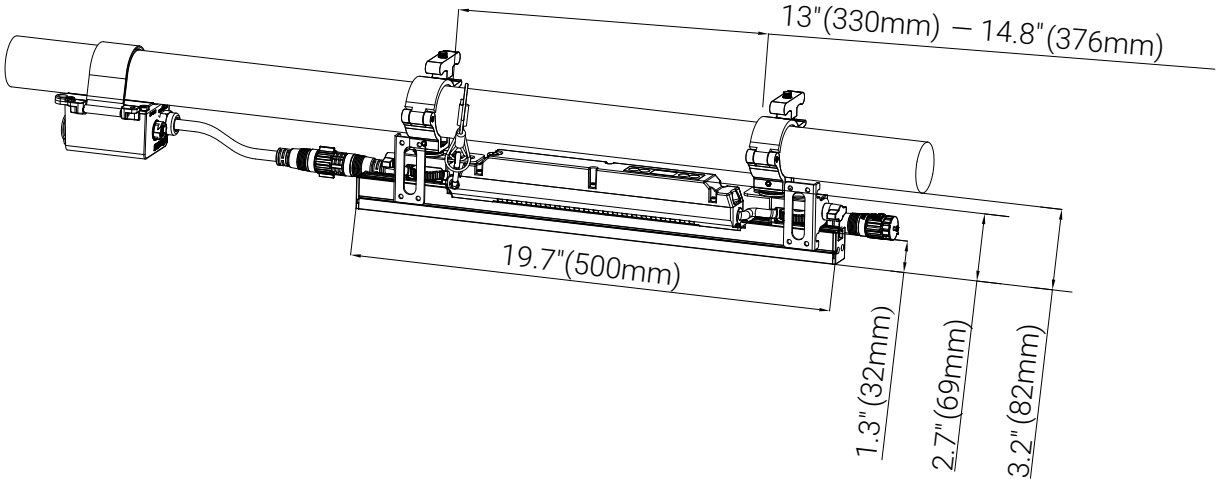

Foshan YiFeng Electric Industrial Co.,Ltd.
No.898, Gaoming Avenue East, Hecheng Blvd, Gaoming District, Foshan, Guangdong, China.
Web: www.acmelighting.com Email: sales@acmelighting.com

All rights reserved by Acme®. Features, specifications and appearance are subject to change without notice.

REV: 09/11/2026

PIXEL LINE SLIM 500

Slim by Design. Integrated Power Supply.

SPEC SHEET

PHOTOMETRIC

Beam Angle:

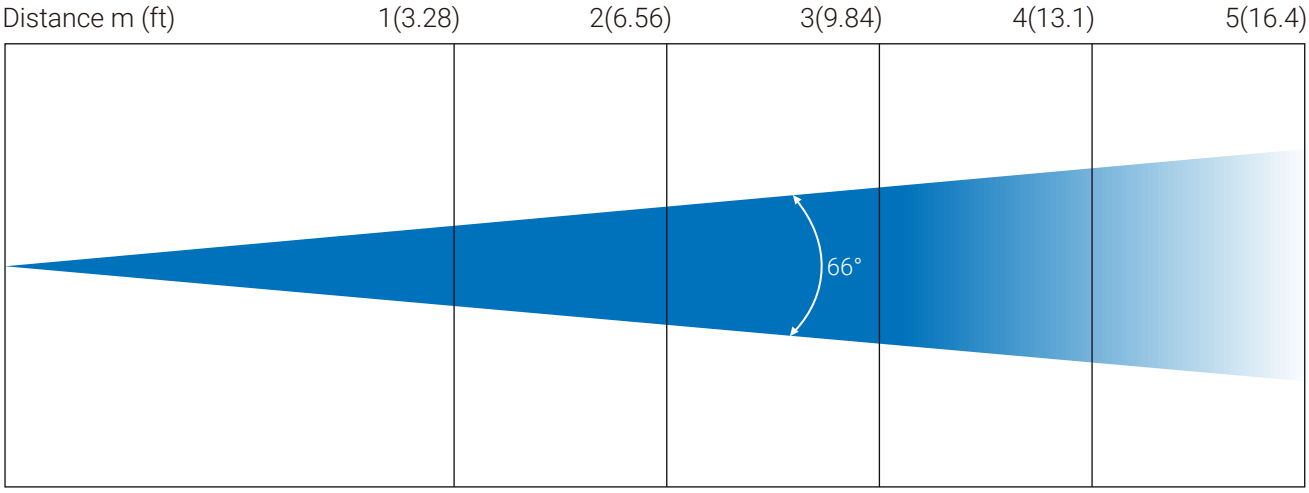

66°Lux	562	141	62	35	22
Diameter m (ft)	1.3(4.3)	2.6(8.6)	3.9(12.9)	5.2(17.2)	6.6(21.5)

Field Angle:

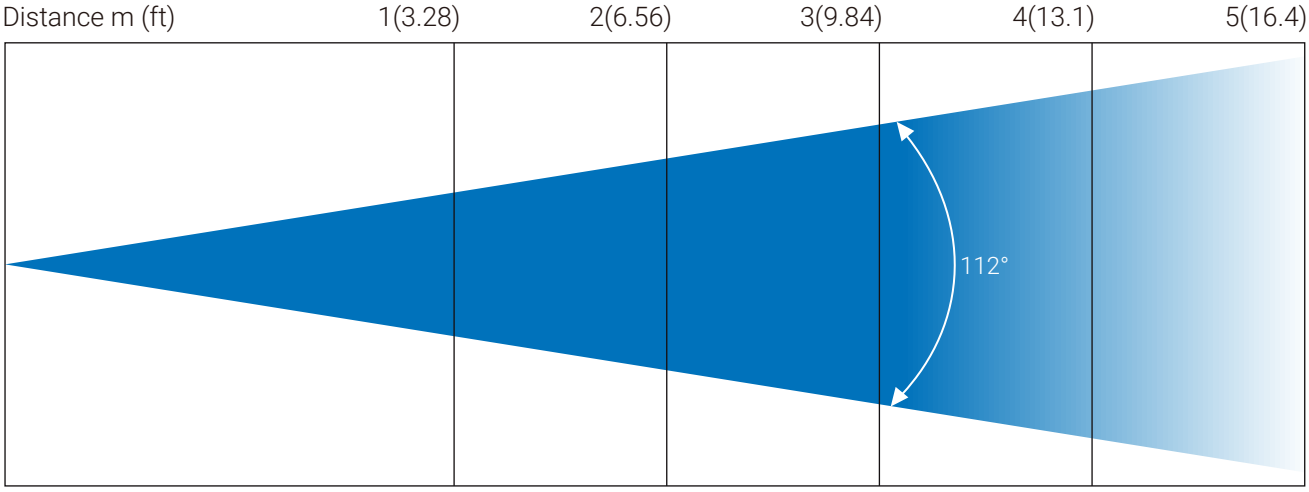

112°Lux	562	141	62	35	22
Diameter m (ft)	2.9(9.7)	5.9(19.3)	8.8(28.9)	11.8(38.6)	14.7(48.2)

Foshan YiFeng Electric Industrial Co.,Ltd.
No.898, Gaoming Avenue East, Hecheng Blvd, Gaoming District, Foshan, Guangdong, China.
Web: www.acmelighting.com Email: sales@acmelighting.com

All rights reserved by Acme®. Features, specifications and appearance are subject to change without notice.

REV: 09/11/2026