PIXEL LINE SLIM

Slim by Design. Integrated Power Supply.

SPEC SHEET



Foshan YiFeng Electric Industrial Co.,Ltd.
No.898, Gaoming Avenue East, Hecheng Blvd, Gaoming District, Foshan, Guangdong, China.
Web: www.acmelighting.com Email: sales@acmelighting.com
All rights reserved by Acme®. Features, specifications and appearance are subject to change without notice.
REV: 09/11/2026

PIXEL LINE SLIM

Slim by Design. Integrated Power Supply.

SPEC SHEET

FIXTURE OVERVIEW

- Traditional LED strips have long been limited by single-function designs, complicated installation, high maintenance demands, and low reusability. To address these challenges, ACME developed the **PIXEL LINE SLIM**—a versatile, IP66-rated fixture that redefines strip lighting by combining pixel effects, footlights, and creative geometric configurations in an ultra-slim design.



- Featuring a multi-source LED array with RGB, warm white, and cool white, it delivers bold, vibrant output with high color rendering for natural, accurate color reproduction. With individual pixel control, it enables dynamic pixel mapping and eye-catching color macro effects.

- Designed for maximum flexibility, the fixture offers 0 to 180° rotation using the included floor stands. When mounted on truss, its sliding track system enables flexible positioning, while the C-100 clamp enables closer mounting to trusses for a clean, streamlined rig.

- Power and data are integrated into a single connector to simplify cabling and accelerate deployment. The built-in power supply supports a maximum connection load of 32 units at 208-240V, 50Hz, and 16 units at 100-125V,60Hz. For added creative flexibility, three optional diffuser types, available in smoked or white, create distinct visual effects—from crisp pixel definition to smooth, continuous lines and clean geometric forms. An optional junction bar enables customized geometric configurations, taking the fixture beyond conventional linear lighting.

- To further streamline touring and rental workflows, a dedicated flight case comes complete with fixtures and all essential accessories, offering a ready-to-deploy solution for efficient transportation and faster setup.

- Built with an IP66-rated construction, the fixture delivers uncompromising performance even in demanding outdoor environments. From concerts and touring productions to architectural installations, the **PIXEL LINE SLIM** delivers exceptional lighting quality, flexible installation, intelligent system design, and creative versatility.

Foshan YiFeng Electric Industrial Co.,Ltd.
No.898, Gaoming Avenue East, Hecheng Blvd, Gaoming District, Foshan, Guangdong, China.
Web: www.acmelighting.com Email: sales@acmelighting.com
All rights reserved by Acme®. Features, specifications and appearance are subject to change without notice.
REV: 09/11/2026

PIXEL LINE SLIM

Slim by Design. Integrated Power Supply.

SPEC SHEET

FEATURE HIGHLIGHTS

- Light Source: 48 x 1.2W RGB/WW/CW LEDs
  Beam Angle: 74°
  Field Angle: 114°
- Fixture Luminous Output: 2,630 lumens
- CCT: 2,700K (WW)
  6,500K (CW)
- CRI: Ra≥98 (WW)
  Ra≥96 (CW)
- Outstanding strobe effect with variable speed
- Smooth dimming 0-100% (4 user selectable dimming curves)
- Individual pixel control and built-in color macro effects
- Excellent color mixing
- IP66 rated
- Built-in positioning system for combining units
- Max. Quantity of Connections with Built-In PSU:
  208-240V, 50Hz: 32 units
  100-125V, 60Hz: 16 units

TECHNICAL SPECIFICATIONS

Model

· Model Name: PIXEL LINE SLIM
· Model Code: SL 100 IP

Light Source

· Light Source:
48 x 1.2W RGB/WW/CW LEDs
· Life Expectancy: 20,000 hours*
*Source manufacturer specification

Photometric Data

· Fixture Luminous Output: 2,630 lumens
· CCT:
2,700K (WW)
6,500K (CW)
· Color Rendering:
Ra≥98 (WW)
Ra≥96 (CW)

Optical System

· Beam Angle: 74°
· Field Angle: 114°

Control & Program

· 4 touch button control panel
· Display: LCD display
· Protocols: DMX512 (via JBOX Plus), RDM, Art-Net, sACN
· Setting and Addressing: Display menu, RDM
· DMX Modes: 11
· DMX Channels:
14/19/24/29/39/49/69/89/129/244/249
· Firmware Upgrade: Upgrade via Ethernet
(IU-02 firmware must be upgraded to V1.8 before using JBOX Plus to upgrade the PIXEL LINE SLIM)

Pan & Tilt

· Tilt: 180° (with floor stands)

Color Mixing

· Excellent color mixing

Electrical

· Input Voltage Range: 100-240Vac; 50/60Hz
· Power Consumption: 50W
· Power In/Out: Hybrid connectors in/out
· Max. Quantity of Connections with Built-In PSU:
208-240V, 50Hz: 32 units
100-125V, 60Hz: 16 units

Foshan YiFeng Electric Industrial Co.,Ltd.
No.898, Gaoming Avenue East, Hecheng Blvd, Gaoming District, Foshan, Guangdong, China.
Web: www.acmelighting.com Email: sales@acmelighting.com
All rights reserved by Acme®. Features, specifications and appearance are subject to change without notice.
REV: 09/11/2026

PIXEL LINE SLIM

Slim by Design. Integrated Power Supply.

SPEC SHEET

TECHNICAL SPECIFICATIONS

Physical

· Weight: 2.2 kg (4.8 lbs)
· Width: 1,000 mm (39.4")
· Depth: 82 mm (3.2")
· Height: 45 mm (1.8")

Construction

· Housing: Aluminum
· Color: Black
· Protection Rating: IP66

Work Environment

· Maximum Ambient Temperature: 45°C
· Minimum Operating Temperature: -20°C
· Maximum Surface Temperature: 65°C

Acoustic Data

· Noise Level:
Auto Mode: 32 dB(A) @ 1 m

Installation

· Universal working position
· Built-in positioning system for combining units
· Horizontal: Utilizing two floor stands (supplied) and two clamps (by others)
· Horizontal Connection: Utilizing one junction bar (sold separately), the fixtures allow for multi-angle adjustment
· Floor: Utilizing two floor stands (supplied)
· Safety cable attachment point

Approvals

· CE compliant
EMC directive 2014/30/EU
LVD directive 2014/35/EU
· UKCA compliant
Electromagnetic Compatibility Regulations 2016
Electrical Equipment (Safety) Regulations 2016
· cETLus compliant
UL 1573
CSA C22.2 #166

Foshan YiFeng Electric Industrial Co.,Ltd.
No.898, Gaoming Avenue East, Hecheng Blvd, Gaoming District, Foshan, Guangdong, China.
Web: www.acmelighting.com Email: sales@acmelighting.com
All rights reserved by Acme®. Features, specifications and appearance are subject to change without notice.
REV: 09/11/2026

INCLUDED ITEMS

Included Items

· Digital user manual
· 2 floor stands(63583592)

ORDERING INFORMATION

Optional Accessories
(With Order Code)

· Flight Case
Standard: Thirty-two-pack loader case (63584639)
North American Standard: TBD
· Clamp: C-100 (2060001693)
· Safety Cable: SW-02 (2060000200-B)
· Hybrid Extension Cable:
0.5 m (3004000334), 1 m (3004000330),
2 m (3004000326), 5 m (3004000329),
10 m (3004000327), 20 m (3004000331)
· JBOX (one power cable included)
· JBOX Plus (one power cable included)
· Junction Bar: 63584478
· Omega Bracket: 3002003003
· Omega Bracket Holder: 63584502
· Round Diffuser:
Smoked (3005006813), White (3005006897)
· Square Diffuser:
Smoked (3005006814), White (3005006895)
· Triangular Diffuser:
Smoked (3005006815), White (3005006896)

Carton Dimensions

· Width: 1,110 mm (43.7")
· Depth: 300 mm (11.8")
· Height: 480 mm (18.9")
· Weight:
G.W.: 20.5 kg (45.2 lbs) (eight-pack loader carton)

Foshan YiFeng Electric Industrial Co.,Ltd.
No.898, Gaoming Avenue East, Hecheng Blvd, Gaoming District, Foshan, Guangdong, China.
Web: www.acmelighting.com Email: sales@acmelighting.com
All rights reserved by Acme®. Features, specifications and appearance are subject to change without notice.
REV: 09/11/2026

ORDERING INFORMATION

Flight Case



Standard: Thirty-two-pack loader case (63584639)

Included Accessories (Choose either JBOX or JBOX Plus)



64 x C-100 (2060001693)



32 x SW-02 (2060000200-B)



1 x Hybrid Extension Cable: 2 m (3004000326)
*Optional Lengths: 0.5 m (3004000334),
1 m (3004000330), 5 m (3004000329),
10 m (3004000327), 20 m (3004000331)



2 x JBOX (power cable included)



2 x JBOX Plus (power cable included)

Optional Accessories



Junction Bar: 63584478



Omega Bracket: 3002003003



Omega Bracket Holder: 63584502



Round Diffuser :
Smoked (3005006813), White (3005006897)



Square Diffuser:
Smoked (3005006814), White (3005006895)



Triangular Diffuser:
Smoked (3005006815), White (3005006896)

Foshan YiFeng Electric Industrial Co.,Ltd.
No.898, Gaoming Avenue East, Hecheng Blvd, Gaoming District, Foshan, Guangdong, China.
Web: www.acmelighting.com Email: sales@acmelighting.com
All rights reserved by Acme®. Features, specifications and appearance are subject to change without notice.
REV: 09/11/2026

INSTALLATION DIAGRAM

1. Horizontal: Utilizing two floor stands (supplied) and two clamps (by others)

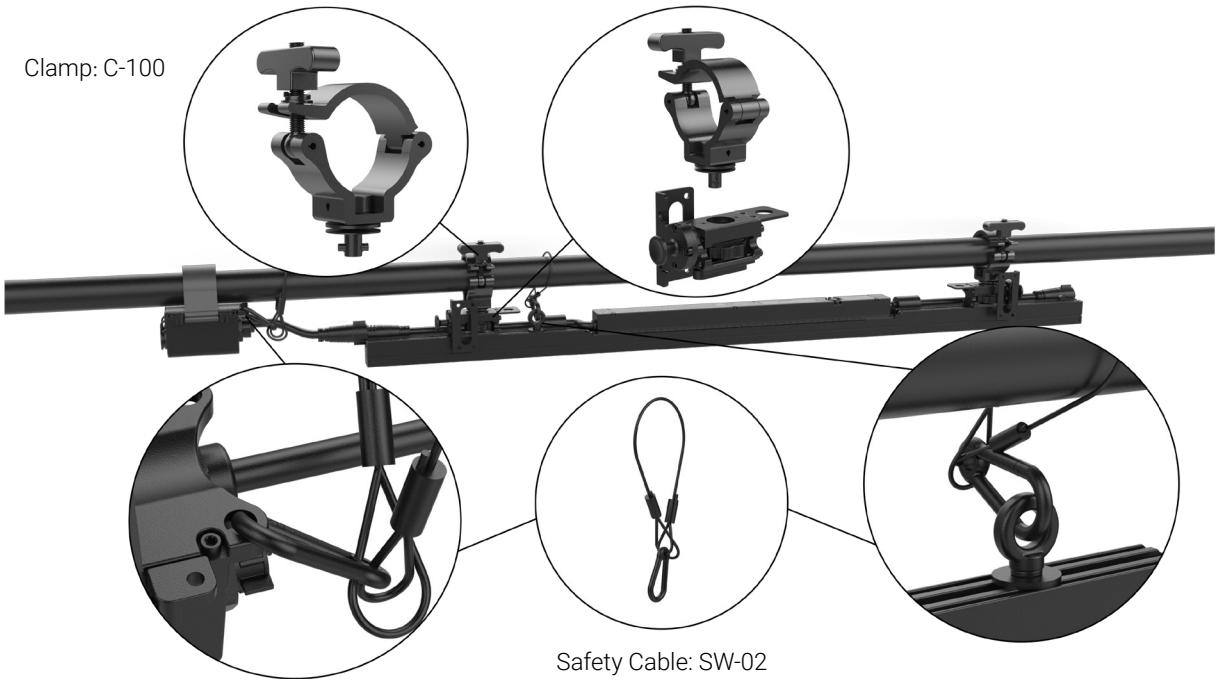

2. Horizontal Connection: Utilizing one junction bar(sold separately), the fixtures allow adjustable angles

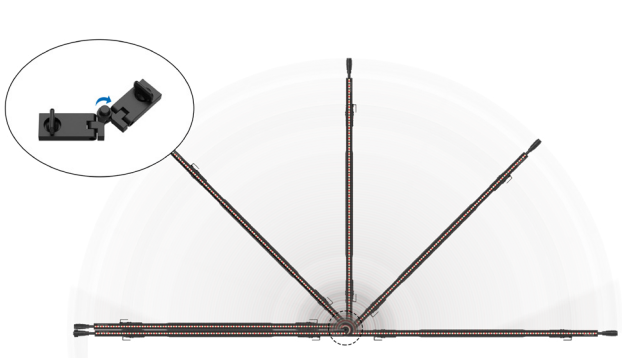

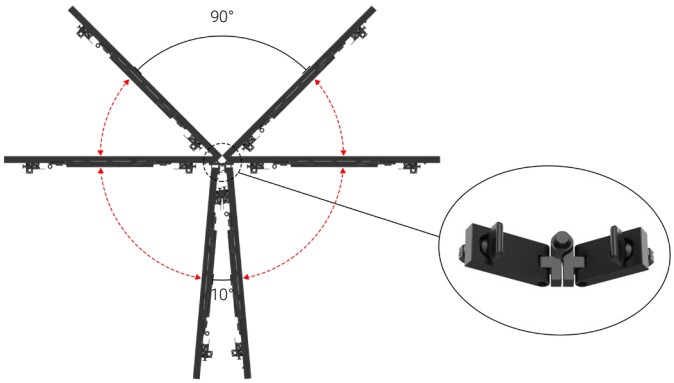

All rights reserved by Acme®. Features, specifications and appearance are subject to change without notice.
REV: 09/11/2026

INSTALLATION DIAGRAM

3. Floor: Utilizing two floor stands (supplied)

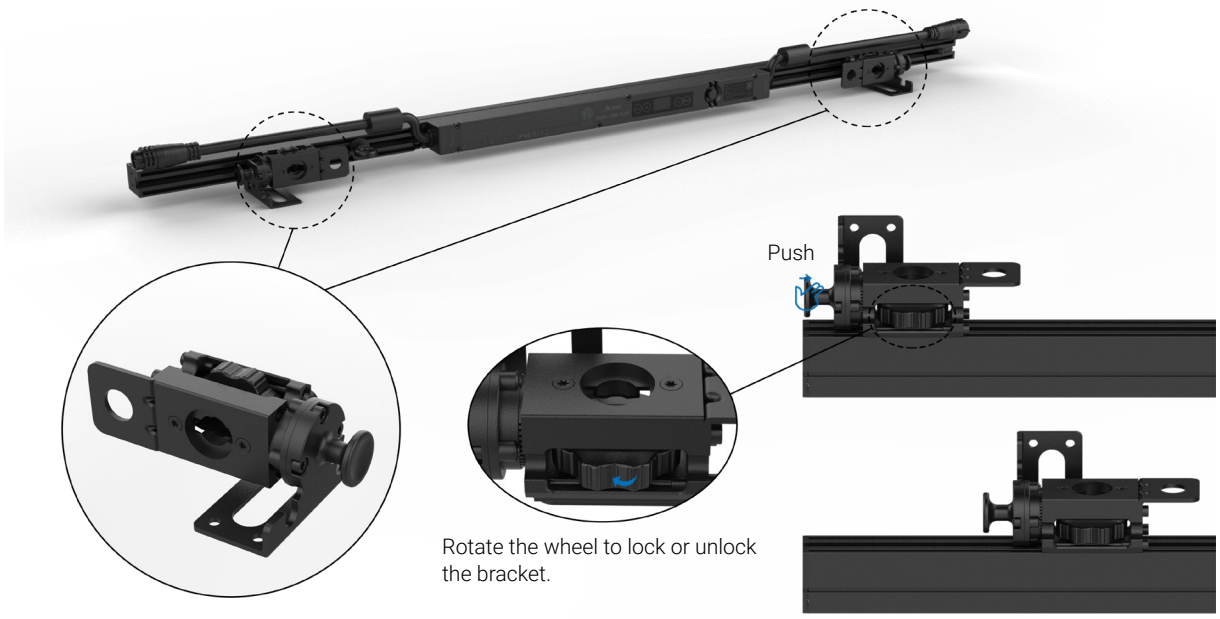

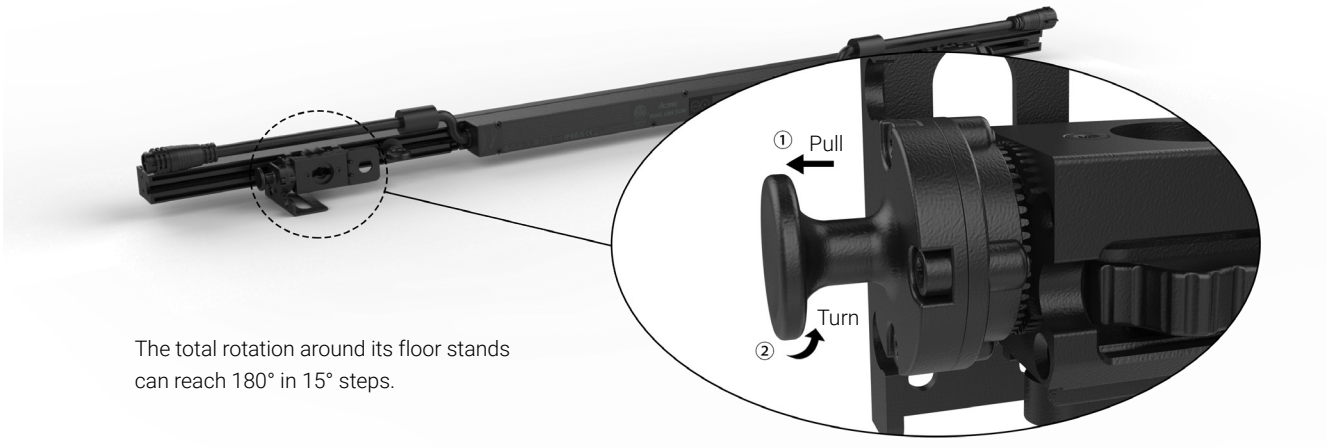

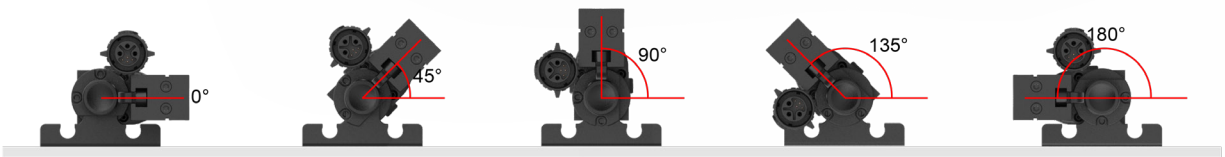

All rights reserved by Acme®. Features, specifications and appearance are subject to change without notice.

INSTALLATION DIAGRAM

4. Omega Bracket Holder Installation

①



Remove the side cover

②



Insert the omega bracket holder

③



Reinstall the side cover



The First Unit



The Last Unit

Install the omega bracket and clamp on the first unit





Install the omega bracket and clamp on the last unit

All rights reserved by Acme®. Features, specifications and appearance are subject to change without notice.

POWER & DATA CONNECTION DIAGRAM

Connect Fixture with JBOX or JBOX Plus

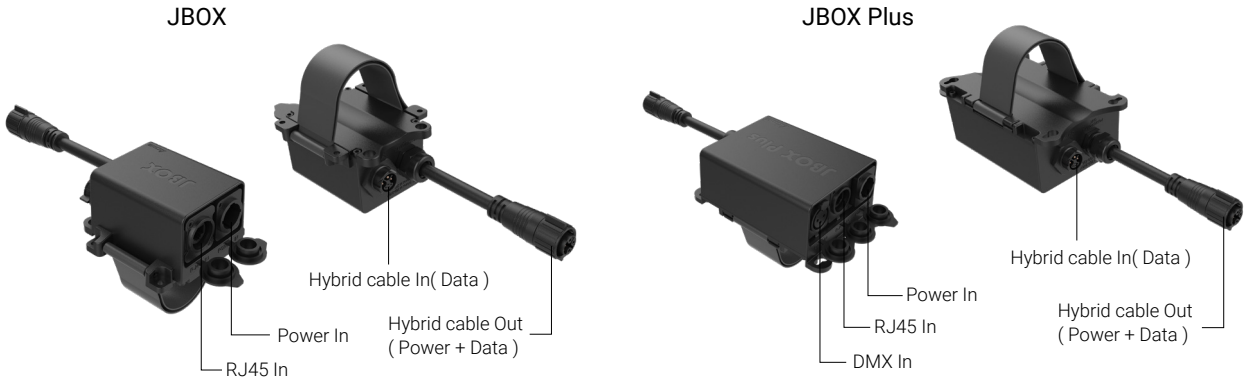

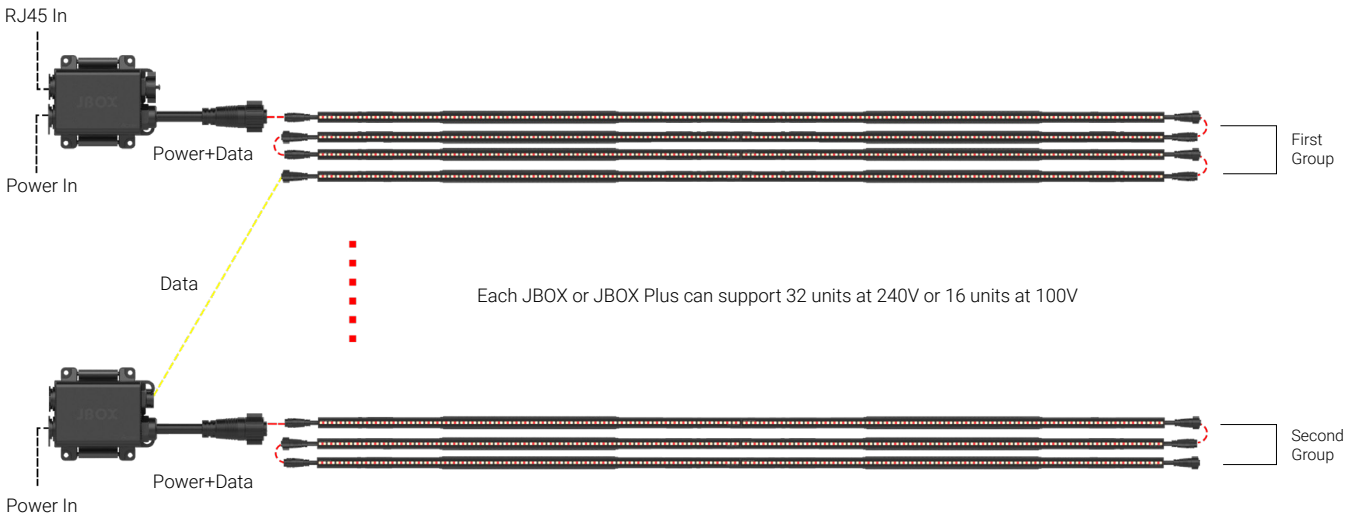

Foshan YiFeng Electric Industrial Co.,Ltd.
No.898, Gaoming Avenue East, Hecheng Blvd, Gaoming District, Foshan, Guangdong, China.
Web: www.acmelighting.com Email: sales@acmelighting.com
All rights reserved by Acme®. Features, specifications and appearance are subject to change without notice.
REV: 09/11/2026

PIXEL LINE SLIM

Slim by Design. Integrated Power Supply.

SPEC SHEET

(STANDARD) FLIGHT CASE

APPLICABLE MODELS

- PIXEL LINE SLIM (SL 100 IP)

ORDER CODE

- 63584639 PIXEL LINE SLIM (SL 100 IP)

CASE WEIGHT

- 47.5 kg (104.7 lbs)

MEAS

- 1,240 x 630 x 630 mm (48.8" x 24.8" x 24.8")

LOADING Q'TY

- Thirty-two-pack loader case

MAXIMUM STACKING

- 3 stacks

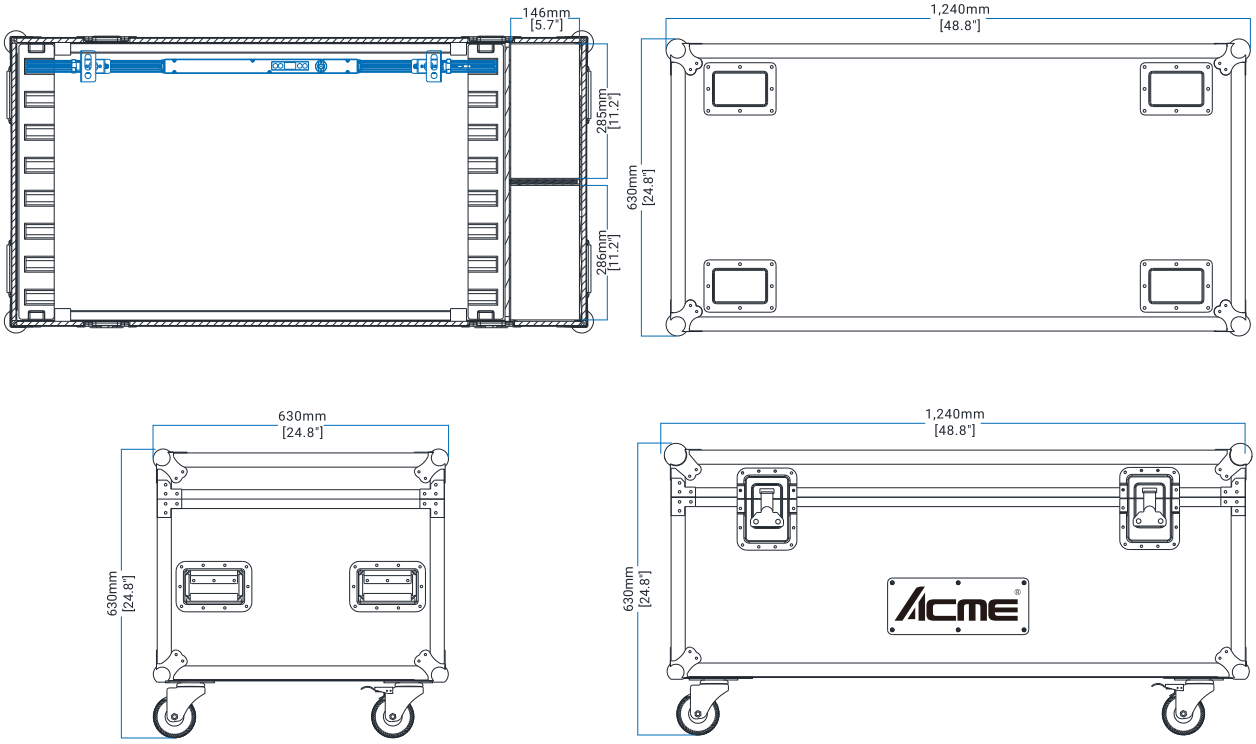

Foshan YiFeng Electric Industrial Co.,Ltd.
No.898, Gaoming Avenue East, Hecheng Blvd, Gaoming District, Foshan, Guangdong, China.
Web: www.acmelighting.com Email: sales@acmelighting.com

All rights reserved by Acme®. Features, specifications and appearance are subject to change without notice.

REV: 09/11/2026

PIXEL LINE SLIM

Slim by Design. Integrated Power Supply.

SPEC SHEET

DIMENSIONS

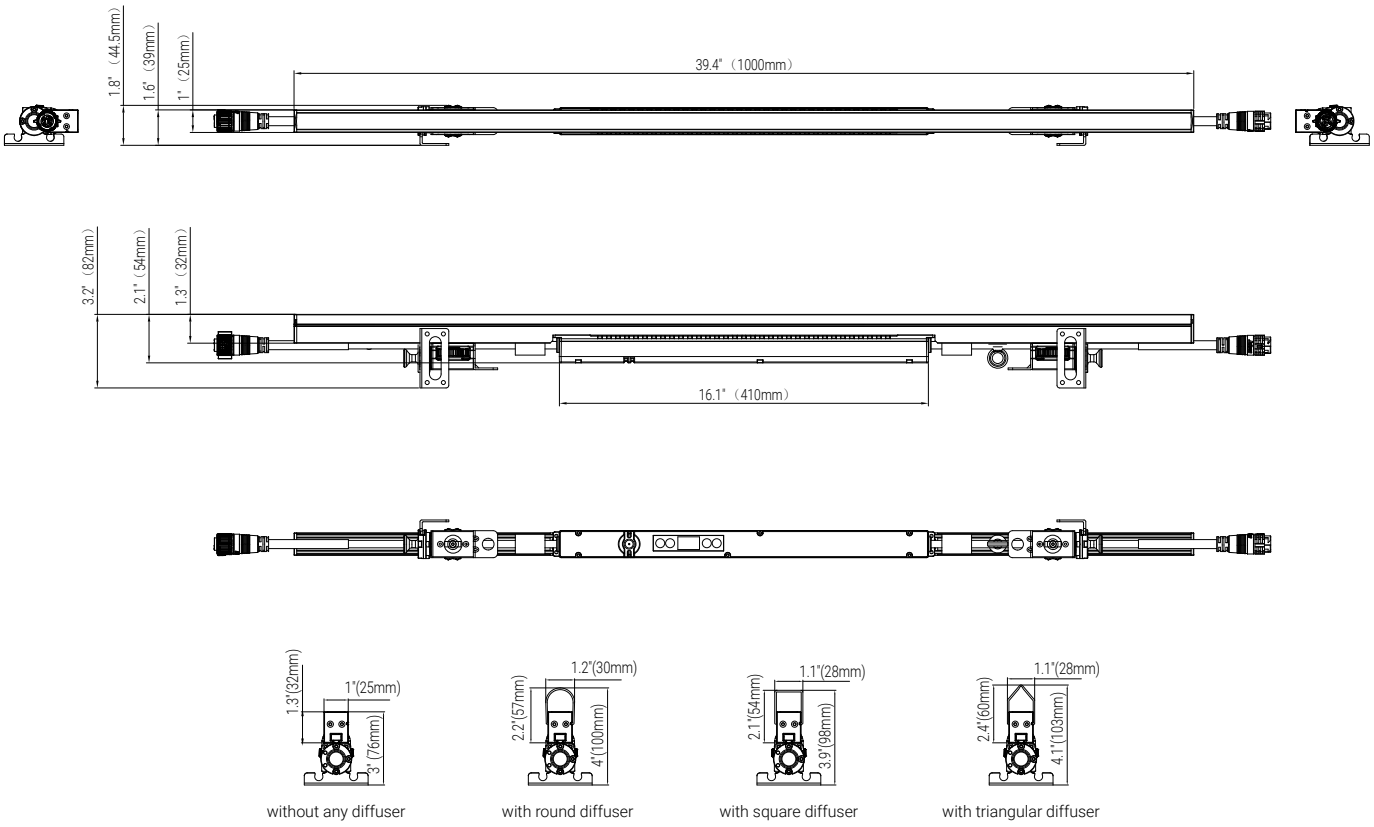

without any diffuser | with round diffuser | with square diffuser | with triangular diffuser

HANGING DIMENSIONS

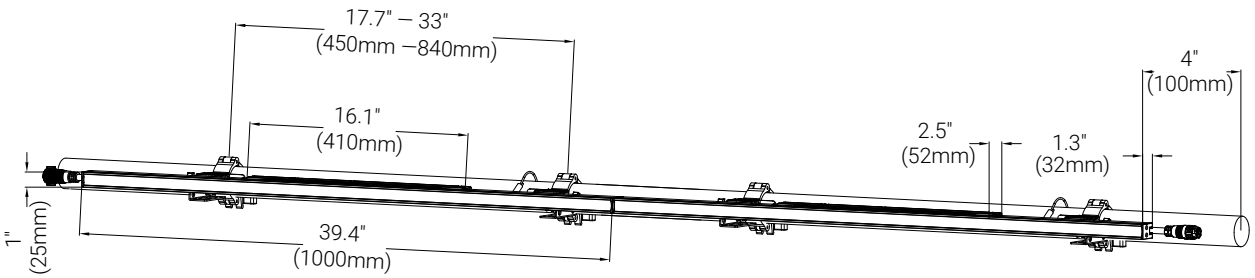

Foshan YiFeng Electric Industrial Co.,Ltd.
No.898, Gaoming Avenue East, Hecheng Blvd, Gaoming District, Foshan, Guangdong, China.
Web: www.acmelighting.com Email: sales@acmelighting.com

All rights reserved by Acme®. Features, specifications and appearance are subject to change without notice.

REV: 09/11/2026

PIXEL LINE SLIM

Slim by Design. Integrated Power Supply.

SPEC SHEET

PHOTOMETRIC

Beam Angle:

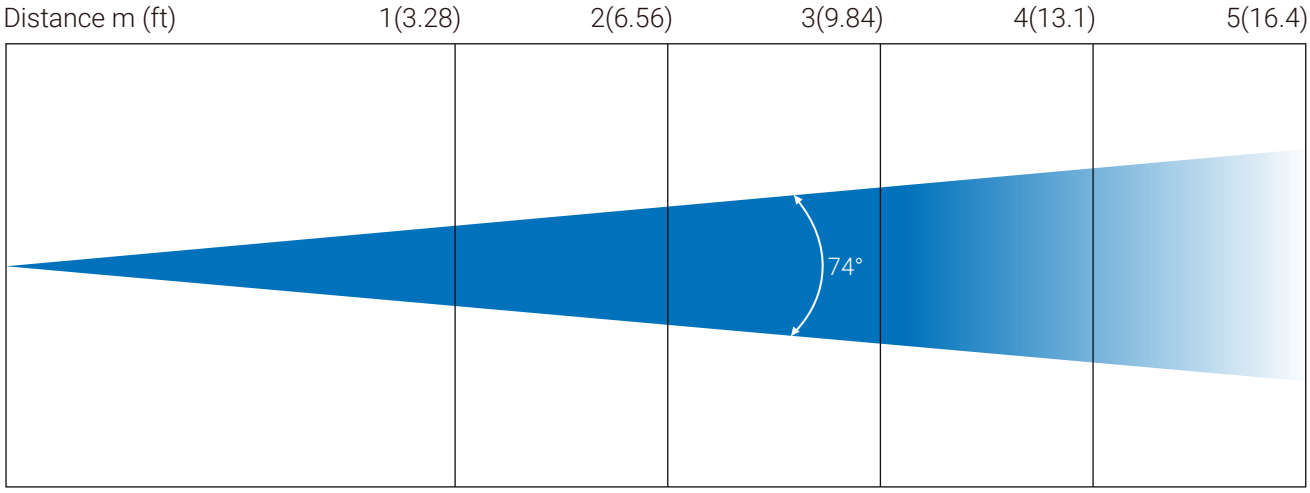

74°Lux	984	246	109	61.5	39
Diameter m (ft)	1.5(4.9)	3.0(9.8)	4.6(15.1)	6.1(20)	7.6(24.9)

Field Angle:

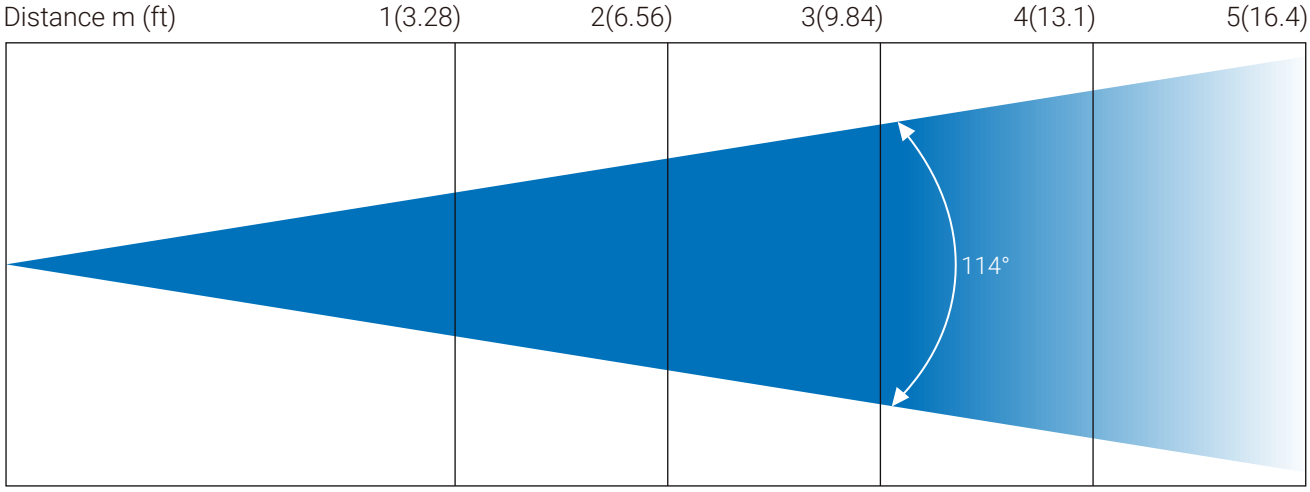

114°Lux	984	246	109	61.5	39
Diameter m (ft)	3.1(10.2)	6.2(20.3)	9.3(30.5)	12.4(40.7)	15.5(50.9)

Foshan YiFeng Electric Industrial Co.,Ltd.
No.898, Gaoming Avenue East, Hecheng Blvd, Gaoming District, Foshan, Guangdong, China.
Web: www.acmelighting.com Email: sales@acmelighting.com

All rights reserved by Acme®. Features, specifications and appearance are subject to change without notice.

REV: 09/11/2026