MANA HYBRID

XA 600 BSW IP



Light Source

600W LED

Diameter of Frontal Lens

170 mm

Beam Angle

2°-45°

Protection Rating

IP66

Total Lumen Output of Fixture

Standard Mode : 21,000 lumens



Main Features

LED engine comprised of 600W LED
170 mm diameter frontal lens
Beam Angle: 2°-45°
Total Lumen Output of Fixture:
Standard Mode : 21,000 lumens
Quiet Mode: 14,900 lumens
CCT: 6,700K
Standard Mode: Ra>70
HCRI Mode: Ra≥90
Linear CMY color mixing
Variable CTO ranging from 2,700K-6,700K
IP66 rated

1 Static Gobo Wheel: 13 gobos, plus open
1 Rotating Gobo Wheel: 8 gobos, plus open
1 Color Wheel: 6 colors + CRI, plus open

2 Prisms:
1 x 4-facet circular prism, 1 x 4-facet linear prism, rotatable in both directions
1° diffusion and 5° diffusion
Smooth dimming 0-100%
Outstanding strobe effect with variable speed

Technical Specifications

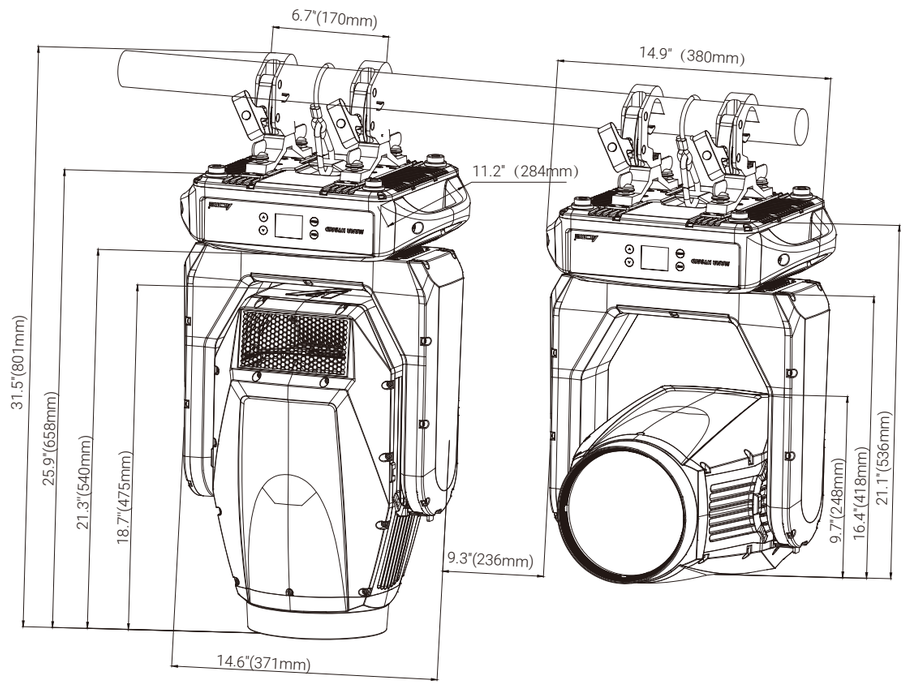

Light Source

· Light Source: 600W LED engine
· Life Expectancy: 20,000 hours*

* Source manufacturer specification

Photometric Data

· Total Lumen Output of Fixture :
Standard Mode : 21,000 lumens
Quiet Mode: 14,900 lumens
· CCT: 6,700K
· Standard Mode: Ra>70
· HCRI Mode: Ra≥90

Optical System

· Beam Angle: 2°-45°
· Diameter of Frontal Lens: 170 mm

Prism / Frost Filter

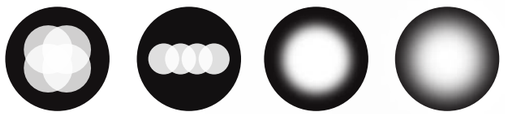

Colors

· Smooth CMY color mixing



· Linear CTO Color Correction: 2,700K-6,700K

· 1 Color Wheel: 6 colors + CRI, plus open

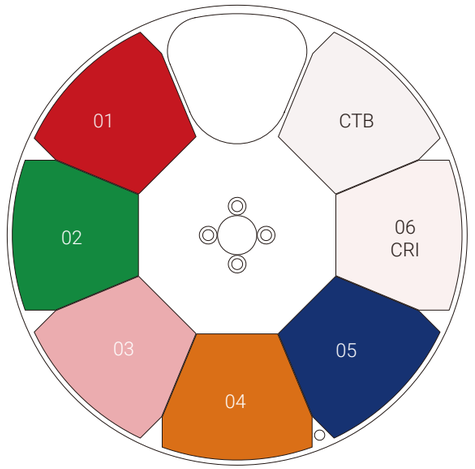

Color Wheel

Static Gobos

· 1 Static Gobo Wheel: 13 gobos, plus open
Gobo Diameter: 17 mm
Image Diameter: 13 mm
Gobo Thickness: 1.1 mm

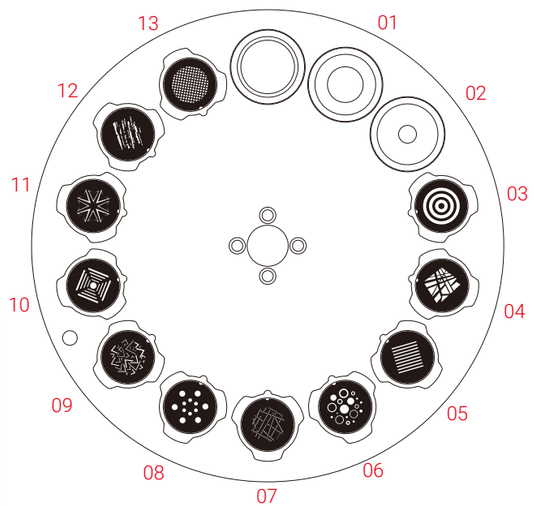

Static Gobo Wheel

Rotating Gobos

· 1 Rotating & Interchangable Gobo Wheel:
8 gobos, plus open
Adjustable-speed rotating gobo in both directions
Gobo Diameter: 20 mm
Image Diameter: 12 mm
Gobo Thickness: 1.1 mm

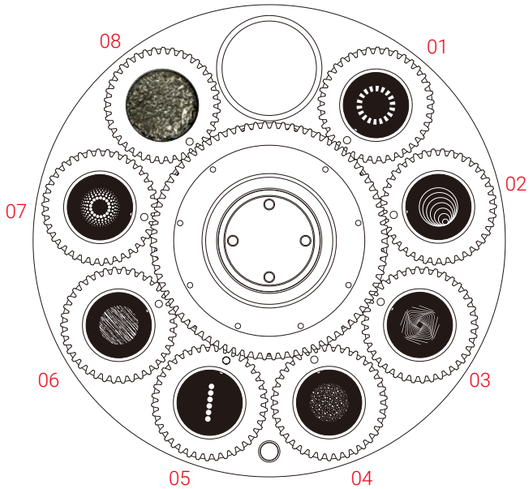

Rotating Gobo Wheel

Animation Wheel

· A graphic animation wheel with continuous rotation in both directions, used alone or in combination with gobos to create the splendid water wave & flame effect, and can be changed into other wheels

Other Effects

· Outstanding strobe effect with variable speed
· Smooth dimming 0-100%



Animation Wheel

Pan & Tilt

· Pan Movement: 540°
· Tilt Movement: 260°
· Automatic Pan/Tilt position correction
· Moving-head operated with 16 bit resolution

Control

· 4 touch button control panel
· Display: LCD display
· Protocols: DMX512, RDM, Art-Net, sACN
· DMX Protocol Modes: 2
· Control Channels: 24/30
· Firmware Upgrade: Upgrade via DMX link or USB disk

Electrical and Connectors

· Input Voltage Range: 100-240Vac; 50/60Hz
· Power Consumption: 910W
· Power In/Out: Waterproof power connector in/out
· Date In/Out: 5-pin waterproof XLR, RJ45 connector

Physical Information

· Fixture Dimensions :
380 x 284 x 658 mm (15.0" x 11.2" x 25.9")
Weight: 30.5 kg (67.3 lbs)

Packing Information

· Flight Case Dimensions:
1,220 x 610 x 805 mm (48.0" x 24.0" x 31.7")
Weight:
Standard:
G.W.: 125.0 kg (275.6 lbs) (two-pack loader case)
North American Standard:
G.W.: 131.4 kg (289.7 lbs) (two-pack loader case)

· Carton Dimensions:
610 x 490 x 675 mm (24.0" x 19.3" x 26.6")
Weight: 37.5 kg (82.7 lbs) (one-pack loader carton)

Work Environment

· Maximum Ambient Temperature: 40°C
· Minimum Operating Temperature: -10°C
· Maximum Surface Temperature: 75°C
· Protection Rating: IP66

Acoustic Data

· Noise Level:
Standard Mode : 44 dB(A) @ 1 m
Quiet Mode : 42 dB(A) @ 1 m

Installation

· Horizontally or vertically mounting
· Universal working position
· 2 omega brackets
· Four M4 threaded fixing holes on nose of fixture for mounting accessories

Photometric (Images)

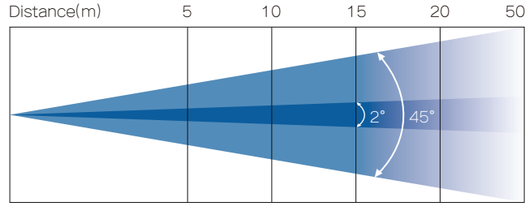

2° Lux	178,000	44,500	19,800	11,100	1,780
Diameter(m)	0.2	0.4	0.5	0.7	1.8
45° Lux	1,900	480	220	120	20
Diameter(m)	4.1	8.3	12.4	16.6	41.4

Specifications subject to change without notice.

25/11/2026